AVALON CITY COUNCIL MEETING
TUESDAY, SEPTEMBER 1, 2015 – 6:00 P.M.
CITY HALL COUNCIL CHAMBERS
410 AVALON CANYON ROAD, AVALON
A G E N D A

In compliance with the Americans with Disability Act, if you need special assistance to participate in this meeting, please contact Denise Radde, City Clerk (310) 510-0220. Notification 48 hours prior to the meeting will enable the City to make reasonable arrangements to ensure accessibility to this meeting. (28 CFR 35. 102-35.104 ADA Title II). All public records relating to an agenda item on this agenda are available for the public inspection at the time the records are distributed to all, or a majority of all, members of the City Council. Such records shall be available at City Hall located at 410 Avalon Canyon Rd.

CALL TO ORDER / ROLL CALL

PLEDGE OF ALLEGIANCE / INVOCATION

ANNOUNCEMENTS / WRITTEN COMMUNICATIONS

PRESENTATION

A proclamation will be read recognizing September 2015 as "Childhood Cancer Awareness Month".

CITY MANAGER REPORT / CITY ATTORNEY REPORT

COUNCILMEMBER REPORTS / MAYOR REPORT

ORAL COMMUNICATION

Members of the public may address the City Council at this time. No action will be taken on non-agenda items at this meeting. Speakers should limit comments to three (3) minutes each.

CONSENT CALENDAR

1. Actions

   Although the live recording is the official record of public meetings, actions are prepared for the Council's approval.

   Recommended Action

   Approve actions from the August 18, 2015 regular City Council meeting and August 25, 2015 special City Council meeting.

2. Consideration of a Resolution Urging the State of California to Provide New Sustainable Funding for State and Local Transportation Infrastructure

   This resolution, in participation with efforts by the League of California Cities and California's Regional Transportation Agencies demonstrates the City of Avalon's support of the Governor to identify sufficient and stable funding sources for local street, road and highway maintenance.

Recommended Action
Adopt resolution urging the State of California to provide new, sustainable funding for state and local transportation infrastructure and send letters to the City's State Representatives requesting an increase in funding for transportation in special session.

3. Roofing Repairs at City Hall
The roof of City Hall is in poor condition. Many areas have dry rot or are badly deteriorated and in need of repair. Currently there is a company fully mobilized on Island that can perform this specialized work.
Recommended Action
1. Determine that formal bidding of roof repair work at City Hall would not provide an advantage to the City and that dispensing with formal bidding would serve the greatest public benefit.
2. Amend the FY2015-16 City Budget to allocate $47,660 for the expenditure of the City Hall Roof Repair from the General Fund.
3. Authorize the City Manager to enter into a contract with Western States Roofing, Inc., in an amount not to exceed $47,660 for the City Hall Roof Repair Project.

4. Consideration of a Resolution to Designate Agents for Matters Relating to the State of California Emergency Management Agency for State Disaster Assistance
Following the two major weather events in 2014, the City adopted resolutions proclaiming the events a local emergency and they were forwarded to the Director of the California Governor's Office of Emergency Services (OES) requesting the State declare a state of emergency. The City received a letter of Director's Concurrence from the OES to assist the City with its recovery efforts. The next step in applying for assistance is to designate a City employee(s) who are authorized to act on our behalf.
Recommended Action
Adopt resolution designating the Management Aide, Administrative Analyst or City Manager as authorized agent(s) for matters relating to the State of California Management Agency for State Disaster Assistance.

5. Engineering & Cost Survey Reports-Storm Damage Areas
Following in line with the above agenda item, Staff has been working with OES to process the City's application for California Disaster Assistance Act (CDAA), including reviewing the required documentation for each of the projects submitted based on damages from the two events.
Recommended Action
Authorize Staff to proceed with solicitation of an Engineering Cost Analysis Study to determine monetary damages suffered as a result of Hurricane Marie & Avalon Complex events.

6. Consideration of a Revision to Allow for a Progress Payment Under the Previously Approved Purchasing Agreement with EBus, Inc.
At the May 5, 2015 City Council meeting, an agreement to purchase three 22-foot electric buses from EBus Inc. was approved. The buses will replace the current trolleys that operate the City of Avalon's fixed route transportation service. EBus, Inc. has completed the fabrication of one of the buses and is requesting the original version of the agreement be amended to allow for a progress payment in the amount of $433,285.50 (price includes sales tax) for the completed bus.
Recommended Action
Authorize the City Manager to execute an amended version of the purchasing agreement with EBus, Inc., to allow for a progress payment for one of the three buses being manufactured for the City's fixed route transportation system, and to make other changes to the agreement requested by EBus, Inc.

7. Resolution Upholding Planning Commission Decision on Vons Appeal
On August 4, 2015 the City Council conducted a duly noticed public hearing to consider the appeal filed by the Catalina Eucalyptus Sumner Alliance challenging the adequacy of the Mitigated Negative Declaration and the Planning Commission decision.
Recommended Action
Adopt resolution adopting a Mitigated Negative Declaration and approving a Coastal Development Permit and Site Plan, based on Findings and subject to Conditions of Approval.

GENERAL BUSINESS

8. Drug Free Workplace Act & Department of Transportation Drug and Alcohol Testing Policy
In order to promote public safety and a drug-free workplace, the U.S. Department of Transportation's Federal Motor Carrier Safety Administration requires that employers have a drug and alcohol testing program for employees working in safety-sensitive positions that operate vessels, drive, or are available to operate vessels or drive, or provide support for commercial motor vehicles for business purposes.
Recommended Action
Approve Policy P-1, Drug Free Workplace Act & Department of Transportation Drug and Alcohol Testing Policy.

9. Approval of the Contract Documents & Authorization to Commence a Public Bid for the Avalon Harbor Fueling Facility – Pier Replacement
The final design of this structure has been evaluated by many public agencies and approval was received from the California Coastal Commission in late August. The timing of this project is critical due to the expiring matching grants that the City has received from the Department of Boating and Waterways. Construction will begin as soon as possible due to the grant expiring on March 16, 2016.
Recommended Action
Approve the Contract Documents and design, and also allow the process of a public bid to follow, for the Avalon Harbor Fueling Facility – Pier Replacement.

10. Request for Letters to the California Public Utilities Commission and State Lands Commission Clarifying Votes of the Avalon City Council Related to Freight Services
At the request of Mayor Marshall, draft letters to the California Public Utilities Commission and the State Lands Commission providing clarification of recent votes of the Avalon City Council related to freight services have been prepared for City Council review and consideration.
Recommended Action
Review and discuss whether to send letters to the California Public Utilities Commission and the State Lands Commission clarifying recent votes of the Avalon City Council related to freight services.

CLOSED SESSION

1. Conference with Legal Counsel—Existing Litigation:

Name of Case: . *People of the State of California (City of Avalon) v. David Lieberman and Catalina Snorkel & Scuba Adventures*:
Los Angeles Superior Court Case Number: 5CN00052

Name of Case: *Lieberman v. City of Avalon, Avalon City Council*,
Los Angeles Superior Court Case Number: BS157065

NOTICE OF POSTING

I, Denise Radde, declare that the City Council Agenda September 1, 2015 was posted on Wednesday, August 26, 2015, on the City's website www.cityofavalon.com, and at City Hall, 410 Avalon Canyon Road. Copies of agendas and staff reports are available at City Hall and on the City website.

Denise A. Radde, City Clerk / Chief Administrative Officer

CITY OF AVALON CITY COUNCIL

MEETING DATE: September 1, 2015 **AGENDA ITEM:** 1

ORIGINATING DEP: City Clerk **CITY MANAGER:** BH

PREPARED BY: Denise Radde, City Clerk

SUBJECT: City Council Actions

RECOMMENDED ACTION(S): Approve City Council Actions from the regular City Council meetings on August 18, 2015 and the Special City Council meeting on August 25, 2015.

REPORT SUMMARY: Although the live recording is the official record of public meetings, actions are prepared for the Council's approval.

FISCAL IMPACTS: N/A

GOAL ALIGNMENT: To be determined.

CONSEQUENCES OF NOT FOLLOWING RECOMMENDED ACTION: N/A

FOLLOW UP ACTION: File Actions in the City Clerk's office.

ADVERTISING, NOTICE AND PUBLIC CONTACT: This item was properly listed on the posted agenda pursuant to the Brown Act.

ATTACHMENTS: City Council Actions will be provided under separate cover.

CITY OF AVALON CITY COUNCIL

MEETING DATE: September 1, 2015 **AGENDA ITEM:** 2

ORIGINATING DEP: Planning/Administration **CITY MANAGER:** BH

PREPARED BY: Audra McDonald, Administrative Analyst

SUBJECT: Consideration of a Resolution urging the State of California to provide new, sustainable funding for State and Local Transportation Infrastructure

---

RECOMMENDED ACTION(S): Adopt the Resolution urging the State of California to provide new, sustainable funding for state and local transportation infrastructure funding and send letters to the City's State Representatives requesting an increase in funding for transportation in special session.

REPORT SUMMARY: Governor Brown has called an extraordinary session to address the underfunding of California's transportation infrastructure. Current transportation funding levels are inadequate to keep up with the cost of maintaining state and local roads. The attached Resolution, in participation with efforts by the League of California Cities and California's Regional Transportation Agencies demonstrates the City of Avalon's support of the Governor to identify sufficient and stable funding sources for local street, road and highway maintenance.

GOAL ALIGNMENT: City Infrastructure.

FISCAL IMPACTS: There are no fiscal impacts at this time.

CONSEQUENCES OF NOT FOLLOWING RECOMMENDED ACTION:
FOLLOW UP ACTION: The City will not be on record as supportive of the request for transportation funding remedies.

ADVERTISING, NOTICE AND PUBLIC CONTACT: Pursuant to the Brown Act.

ATTACHMENTS:
1. Resolution
2. Sample Letter

RESOLUTION _____

A RESOLUTION URGING THE STATE TO PROVIDE NEW SUSTAINABLE FUNDING FOR STATE AND LOCAL TRANSPORTATION INFRASTRUCTURE

WHEREAS, Governor Edmund G. Brown, Jr. has called an extraordinary session to address the immense underfunding of California's transportation infrastructure; and

WHEREAS, cities and counties own and operate more than 81 percent of streets and roads in California, and from the moment we open our front door to drive to work, bike to school, or walk to the bus station, people are dependent upon a safe, reliable local transportation network; and

WHEREAS, the City of City of Avalon has participated in efforts with the California State Association of Counties, League of California Cities, and California's Regional Transportation Planning Agencies to study unmet funding needs for local roads and bridges, including sidewalks and other essential components; and

WHEREAS, the resulting 2014 California Statewide Local Streets and Roads Needs Assessment, which provides critical analysis and information on the local transportation network's condition and funding needs, indicates that the condition of the local transportation network is deteriorating as predicted in the initial 2008 study; and

WHEREAS, the results show that California's local streets and roads are on a path of significant decline. On a scale of zero (failed) to 100 (excellent), the statewide average pavement condition index (PCI) is 66, placing it in the "at risk" category where pavements will begin to deteriorate much more rapidly and require rehabilitation or rebuilding rather than more cost-effective preventative maintenance if funding is not increased; and

WHEREAS, if funding remains at the current levels, in 10 years, 25 percent of local streets and roads in California will be in "failed" condition; and

WHEREAS, cities and counties need an additional $1.7 billion just to maintain a status quo pavement condition of 66, and much more revenue to operate the system with Best Management Practices, which would reduce the total amount of funding needed for maintenance in the future; and

WHEREAS, models show that an additional $3 billion annual investment in the local streets and roads system is expected to improve pavement conditions statewide from an average "at risk" condition to an average "good" condition; and

WHEREAS, if additional funding isn't secured now, it will cost taxpayers twice as much to fix the local system in the future, as failure to act this year will increase unmet funding needs for local transportation facilities by $11 billion in five years and $21 billion in ten years; and

WHEREAS, modernizing the local street and road system provides well-paying construction jobs and boosts local economies; and

WHEREAS, the local street and road system is also critical for farm to market needs, interconnectivity, multimodal needs, and commerce; and

WHEREAS, police, fire, and emergency medical services all need safe reliable roads to react quickly to emergency calls and a few minutes of delay can be a matter of life and death; and

WHEREAS, maintaining and preserving the local street and road system in good condition will reduce drive times and traffic congestion, improve bicycle safety, and make the pedestrian experience safer and more appealing, which leads to reduce vehicle emissions helping the State achieve its air quality and greenhouse gas emissions reductions goals; and

WHEREAS, restoring roads before they fail also reduces construction time which results in less air pollution from heavy equipment and less water pollution from site run-off; and

WHEREAS, in addition to the local system, the state highway system needs an additional $5.7 billion annually to address the state's deferred maintenance; and

WHEREAS, in order to bring the local system back into a cost-effective condition, at least $7.3 billion annually in new money going directly to cities and counties; and

NOW, THEREFORE, BE IT RESOLVED THAT THE CITY COUNCIL OF THE CITY OF AVALON strongly urges the Governor and Legislature to identity a sufficient and stable funding source for local street and road and state highway maintenance and rehabilitation to ensure the safe and efficient mobility of the traveling public and the economic vitality of California.

RESOLVED FURTHER, that the CITY OF AVALON strongly urges the Governor and Legislature to adopt the following priorities for funding California's streets and roads.

1. **Make a significant investment in transportation infrastructure.** Any package should seek to raise at least $6 billion annually and should remain in place for at least 10 years or until an alternative method of funding our transportation system is agreed upon.

2. **Focus on maintaining and rehabilitating the current system.** Repairing California's streets and highways involves much more than fixing potholes. It requires major road pavement overlays, fixing unsafe bridges, providing safe access for bicyclists and pedestrians, replacing storm water culverts, as well as operational improvements that necessitate the construction of auxiliary lanes to relieve traffic congestion choke points and fixing design deficiencies that have created unsafe merging and other traffic hazards. Efforts to supply funding for transit in addition to funding for roads should also focus on fixing the system first.

3. **Equal split between state and local projects.** We support sharing revenue for roadway maintenance equally (50/50) between the state and cities and counties, given the equally-pressing funding needs of both systems, as well as the longstanding historical precedent for collecting transportation user fees through a centralized system and sharing the revenues across the entire network through direct subventions. Ensuring that funding to local governments is provided directly, without intermediaries, will accelerate project delivery and ensure maximum accountability.

4. **Raise revenues across a broad range of options.** Research by the California Alliance for Jobs and Transportation California shows that voters strongly support increased funding for transportation improvements. They are much more open to a package that spreads potential tax or fee increases across a broad range of options, including fuel taxes, license fees, and registration fees, rather than just one source. Additionally, any package should move California toward an all-users pay structure, in which everyone who benefits from the system contributes to maintaining it – from traditional gasoline-fueled vehicles, to new hybrids or electric vehicles, to commercial vehicles.

5. **Invest a portion of diesel tax and/or cap & trade revenue to high-priority goods movement projects**. While the focus of transportation funding package should be on maintaining and rehabilitating the existing system, California has a critical need to upgrade the goods movement infrastructure that is essential to our economic well-being. Establishing a framework to make appropriate investments in major

goods movement arteries can lay the groundwork for greater investments in the future that will also improve air quality and reduce greenhouse gas emissions.

6. **Strong accountability requirements to protect the taxpayers' investment.** Voters and taxpayers must be assured that all transportation revenues are spent responsibly. Local governments are accustomed to employing transparent processes for selecting road maintenance projects aided by pavement management systems, as well as reporting on the expenditure of transportation funds through the State Controller's Local Streets and Roads Annual Report.

7. **Provide Consistent Annual Funding Levels.** Under current statute, the annual gas tax adjustment by the Board of Equalization is creating extreme fluctuations in funding levels – a $900 million drop in this budget year alone. A transportation funding package should contain legislation that will create more consistent revenue projections and allow Caltrans and transportation agencies the certainty they need for longer term planning.

ADOPTED this 1st day of September, 2015.

I, the undersigned, hereby that the foregoing Resolution Number_____was duly adopted by the City Council of the City of Avalon following a roll call vote:

Ayes:
Noes:
Absent:
Abstain:

_____
Ann H. Marshall, Mayor

_____
Denise A. Radde, City Clerk

SAMPLE DRAFT – PLEASE CUSTOMIZE AND PUT ON LETTERHEAD

July XX, 2015

The Honorable [Legislator's Name]
California State (Senate or Assembly)
State Capitol Building, [Room #]
Sacramento, CA 95814

Re: Increase Funding for Transportation in Special Session

Dear Senator/Assemblymember [Legislator's Name]:

On behalf of the (City or County), I'm writing to urge you to support a transportation funding package in the special session that makes a meaningful dent in California's transportation funding shortfall. This is a critical issue for our community that needs to be addressed this legislative session. Our city supports the Fix our Roads Coalition, a coalition of local governments, business, labor, and transportation advocates that supports a legislative solution to our transportation funding problems this year.

Cities and counties own and operate more than 81 percent of California's roads. If funding remains at current inadequate levels, in 10 years a quarter of local streets and roads in California will be in "failed" condition and the funding shortfall grows by $21 billion. According to a recent national report, poor roads cost the average California motorist $762 per year in extra vehicle maintenance costs.

Here in [City or County] INSERT LOCAL STATISTICS ON ROAD CONDITIONS AND PROJECTS THAT COULD BENEFIT FROM FUNDING

(I/our city) supports a transportation funding package that amounts to $6 billion annually for at least 10 years. Any funding package should split funds equally between state and local governments. Cities and counties alone need an additional $3 billion annual investment in the local streets and roads system to improve pavement conditions to an average "good" condition.

Any funding package should also be spread across a broad range of funding sources to ensure no one source is increased too much. We support moderate increases in gas and diesel taxes, vehicle registration and license fees, dedicating a portion of cap-and-trade revenue paid at the pump, and user charges for non-fossil fuel powered vehicles. Any package should move California toward an all-users pay structure in which everyone who benefits from the system contributes to maintaining it.

Additionally, the package should provide strong accountability provisions that protect taxpayers' investment. This includes constitutionally protecting transportation revenues, repaying existing transportation loans, ending ongoing diversions, establishing performance and accountability criteria, Caltrans reform and oversight, and expediting project delivery.

We know these issues aren't easy to address, but they will have direct and lasting benefits for our community and for the motorists in your district.

We hope you will support moving a transportation funding package forward.

SAMPLE DRAFT – PLEASE CUSTOMIZE AND PUT ON LETTERHEAD

Sincerely,

[Name and Title]

CITY OF AVALON CITY COUNCIL

MEETING DATE: September 1, 2015 **AGENDA ITEM:** 3

ORIGINATING DEP: Public Works **CITY MANAGER:** BH

PREPARED BY: Dennis Jaich –Interim Director of Public Works

SUBJECT: Roofing Repairs at City Hall

RECOMMENDED ACTION(S):

1. Determine that formal bidding of roof repair work at City Hall would not provide an advantage to the City and that dispensing with formal bidding would serve the greatest public benefit.
2. Amend the FY2015-16 City Budget to allocate $47,660 for the expenditure of the City Hall Roof Repair from the General Fund.
3. Authorize the City Manager to enter a contract with Western States Roofing, Inc., in an amount not to exceed $47,660 for the City Hall Roof Repair Project.

REPORT SUMMARY:

Within the City Hall building, the "T" braces (wooden structural members) that support the roof above the Recreation Department ceiling are deteriorated and have exhibited a "dry rot" condition. Consequently, the roof members need to be replaced, and this work will require the roofing to be removed and replaced as well. Additionally, there are several other areas on this roof that need to be re-roofed. As is well documented, there are many leaks on opposite sides of the building that need to be reconstructed in tile, as well as a large portion of the flat roofing membrane areas.

There is currently a company performing work on the island that specializes in roofing. Western States Roofing, Inc., is finishing a large roofing project at the High School, where they installed the same materials, and are performing the same type of work as is needed at City Hall. Therefore, due to their specialty in roofing projects, and the fact they would not need to fully mobilize on to the island, staff believes that contracting with Western States Roofing would be a positive action and would provide a cost saving advantage.

In general, the City is required to award construction projects of $5,000 or more through a formal bidding process. However, state law allows a city to dispense with formal bidding where it will not produce a competitive advantage to the city or will not affect the final result. (*Graydon v. Pasadena Redevelopment Agency* (1980) 104 Cal.App.3d 631.) Given the unique situation of having a qualified contractor on the island performing a similar project, staff believes that hiring Western States Roofing will provide a greater benefit to the City than could be obtained through formal bids.

Additionally, because Western States Roofing is already on the island, repair work may begin expeditiously if the City Council authorizes the project to proceed. If the project were formally bid, bid documents would need to be prepared and then advertised for 30 days, and execution of the contract and mobilization would need to occur. The delay in commencing the repair work would be at least 75 days (likely more), and would result in additional costs to prepare bid documents. Weather projections are expecting an *El Niño* event this fall and winter, which is likely to bring substantial rainfall to the island. If the project is delayed, *El Niño* storms may occur before the roof is repaired, causing further damage to City Hall and potentially interrupting the conduct of City business.

In order to compare potential costs, staff has requested two different quotes. Western States Roofing has offered to complete the project for a total cost of $43,660. Fineline Construction has offered to complete the project for a total cost of $42,300. However, it should be noted that the two contractors did not quote the same scope of work. Western States Roofing included significantly more flat roofing replacement (nearly 5,000 sq. ft. more) and provides a 20-year guarantee on materials and a 5-year guarantee on labor. The flat roofing is an area of significant leakage, and the additional work is necessary. Thus, Western States Roofing will provide significantly more value to the City.

Even though the base quote is $43,660, staff is concerned that there may be unknown additional dry rot that may be uncovered during the course of the project. In an effort to avoid delays on the project, staff is requesting authorization to expend up to a total amount of $47,660 in case additional work is required.

GOAL ALIGNMENT: City Infrastructure

FISCAL IMPACTS:
The City Hall Roof Repair capital improvement project is not included in the adopted FY2015-16 City Budget and there is no corresponding revenue source to pay for the repairs. Therefore, the proposed funding of this project is from reserves; the unassigned and unrestricted portion of the General Fund. This staff report represents a Budget Amendment to fund the City Hall Roof Repair from the General Fund in the amount of $47,600.00.

Please note that this project was discussed during various Budget Study Sessions as a project needing to be completed in FY2015-16. City Council elected not to add certain capital improvement projects until either (1) a revenue source could be identified to pay for the expenditure, or (2) when available reserves balances were identified. Council elected to wait until a final reconciliation of the FY2014-15 unassigned and unrestricted fund balances were completed. The overall fund balance analysis will be completed by the end of August and presented to Council in September. However, the preliminary fund balances indicate that the General Fund has sufficient reserves well in excess of the proposed City Hall Roof Repair.

CONSEQUENCES OF NOT FOLLOWING RECOMMENDED ACTION:
If the project is not completed, the City Hall roof will continue to leak during any rain event and dry rot may further deteriorate the T braces. If the City Council directs staff to advertise the project for formal bids, the low bid is likely to exceed Western States Roofing's quote due to

the need to fully mobilize to the island. Commencement of the project will be delayed at least 60 days, which will increase the likelihood of a rain event occurring prior to the repairs or of rain interrupting completion of the project. Given the projections for *El Niño* conditions this fall and winter, the island may receive substantial rainfall, which could result in significant damages and interruptions if the roof at City Hall is not fixed.

FOLLOW UP ACTION:
Enter a contract with Western States Roofing, Inc.

ADVERTISING, NOTICE AND PUBLIC CONTACT:
Pursuant to the Brown Act.

ATTACHMENTS:
Quote from Western States Roofing, Inc.
Quote from Fineline Construction

Precise Aerial Roof Measurement Report

Prepared for you by: Western States Roofing, Inc.

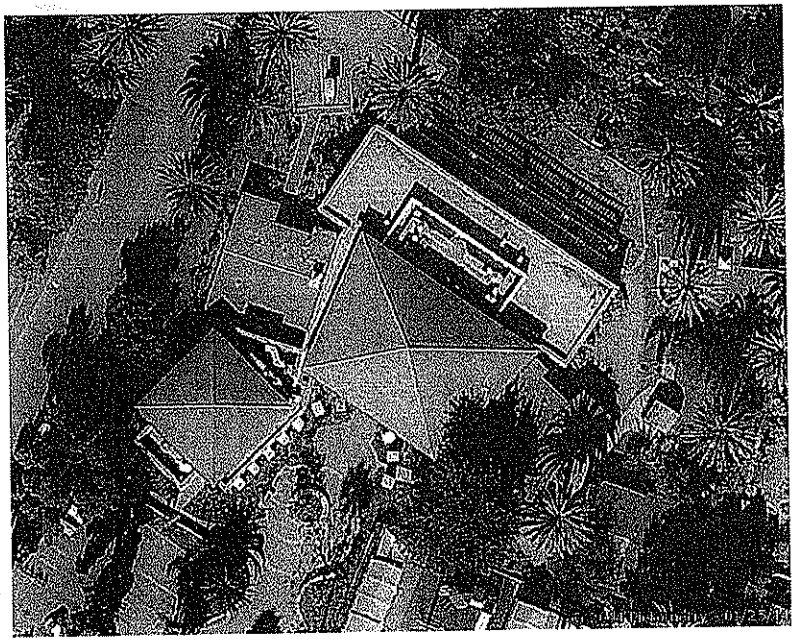

410 Avalon Canyon Rd, Avalon,CA 90704

Western States Roofing, Inc.
18605 Parthenia Street
Northridge, CA 91324

Shawn Reeves
tel. 818-718-0770
email: Shawn@westernstatesroofing.com

Western States Roof Systems, Inc.

Premium Report
June 27, 2015

410 Avalon Canyon Rd, Avalon, CA 90704

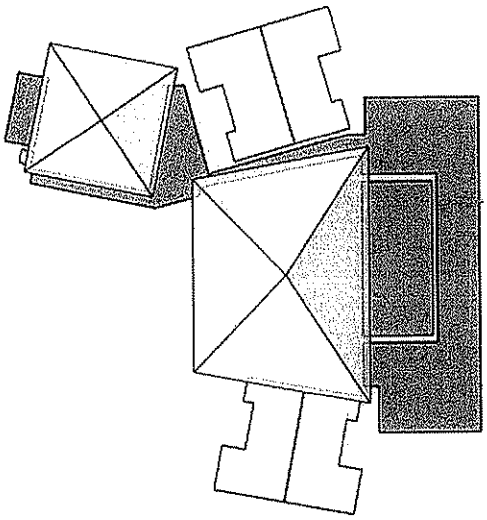

In this 3D model, facets appear as semi-transparent to reveal overhangs.

Report Details

Report:11303444

Roof Details

Total Roof Area =12,161 sq ft
Total Roof Facets =16
Predominant Pitch =0/12
Number of Stories <=1
Total Ridges/Hips =364 ft
Total Valleys =0 ft
Total Rakes =131 ft
Total Eaves =542 ft
Total Penetrations =23
Total Penetrations Perimeter = 342 ft
Total Penetrations Area = 298 sq ft

Report Contents

Images.....2
Length Diagram.....5
Pitch Diagram.....6
Area Diagram.....7
Notes Diagram.....8
Penetrations Diagram.....9
Report Summary.....10

Contact: Sabrina Garcia
Company: Western States Roof Systems, Inc.
Address: 18605 Parthenia Street
Northridge CA 91324
Phone: 818-773-9471

Measurements provided by www.eagleview.com

Certified Accurate
www.eagleview.com/Guarantee.aspx

This document is provided under License by EagleView Technologies to the requestor for their Internal Use Only subject to the terms and conditions previously agreed to by the requestor when they registered for use of EagleView Technologies Services.
It remains the property of EagleView Technologies and may be reproduced and distributed only within the requestor's company. Any reproduction or distribution to anyone outside of the requestor's company without EagleView's prior written permission is strictly prohibited. All aspects and handling of this report are subject to the Terms and Conditions previously agreed to by the requestor.

Copyright © 2008-2015 EagleView Technologies, Inc. – All Rights Reserved – Covered by U.S. Patent Nos. 8,078,436; 8,145,578; 8,170,840; 8,209,152; 8,515,125. Other Patents Pending.

Images

The following aerial images show different angles of this structure for your reference.

Top View

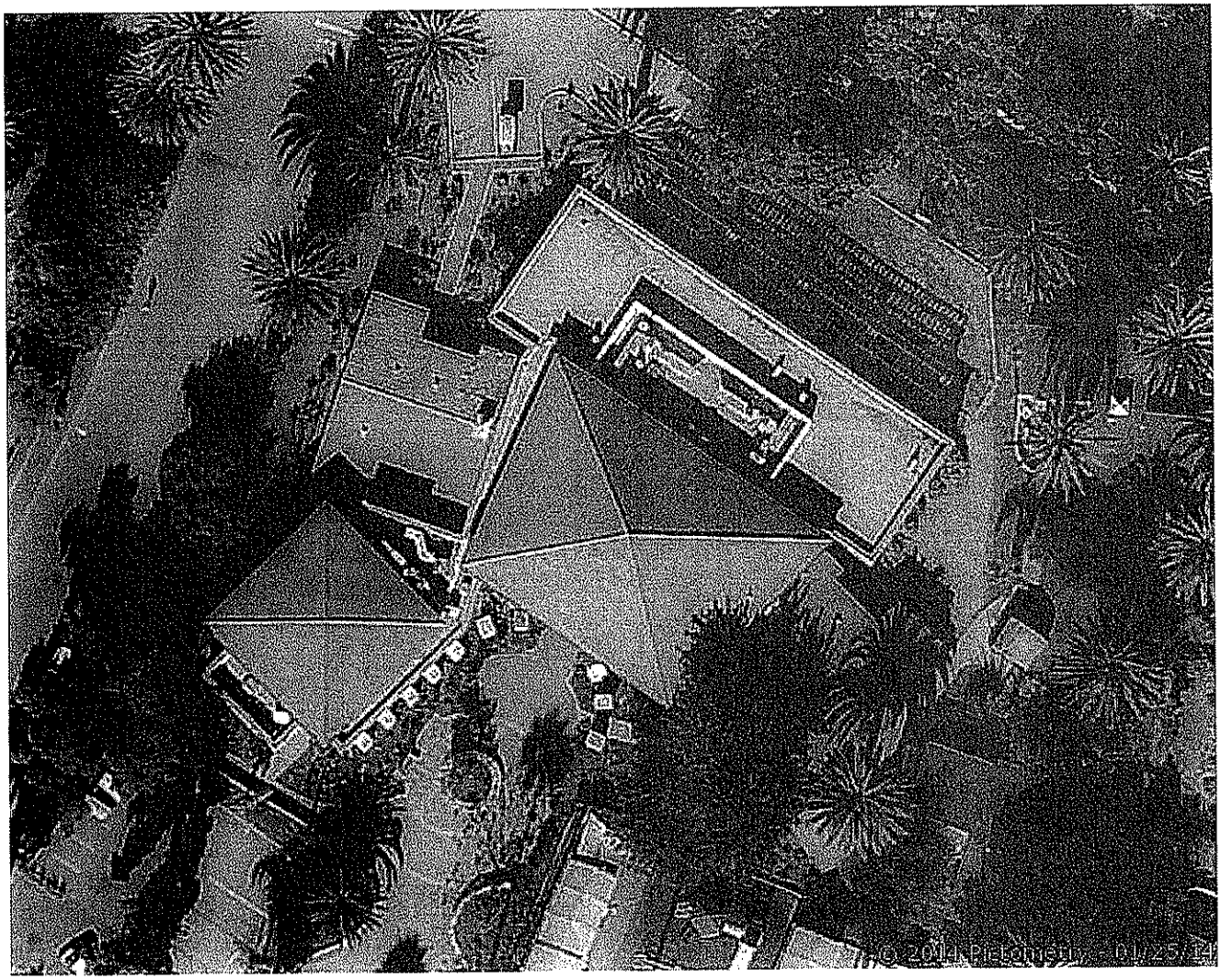

This document is provided under License by EagleView Technologies to the requestor for their Internal Use Only subject to the terms and conditions previously agreed to by the requestor when they registered for use of EagleView Technologies Services. It remains the property of EagleView Technologies and may be reproduced and distributed only within the requestor's company. Any reproduction or distribution to anyone outside of the requestor's company without EagleView's prior written permission is strictly prohibited. All aspects and handling of this report are subject to the Terms and Conditions previously agreed to by the requestor.

Copyright © 2008 -2015 EagleView Technologies, Inc. – All Rights Reserved – Covered by U.S. Patent Nos. 8,078,436; 8,145,578; 8,170,840; 8,209,152; 8,515,125. Other Patents Pending.

North Side

South Side

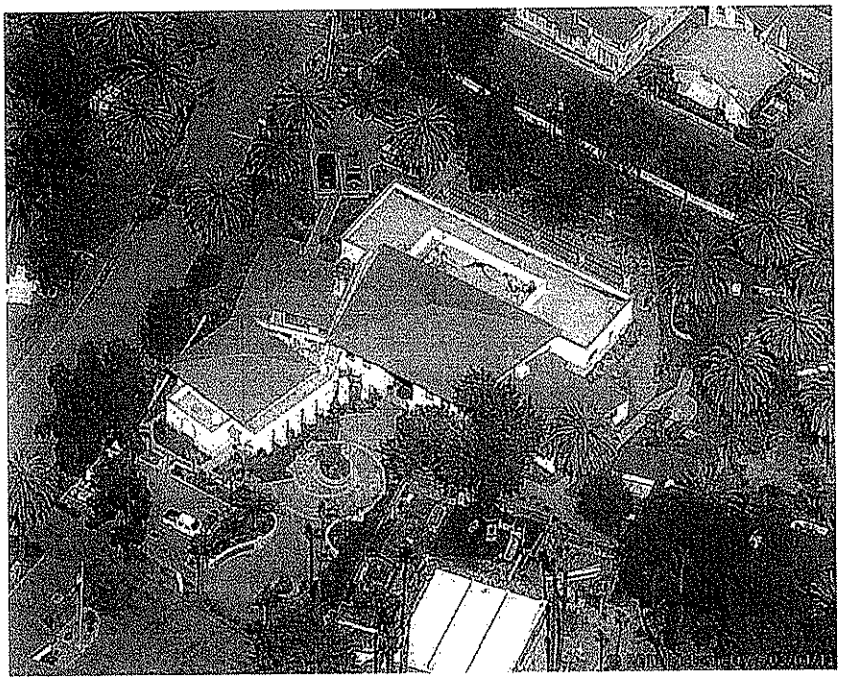

This document is provided under License by EagleView Technologies to the requestor for their Internal Use Only subject to the terms and conditions previously agreed to by the requestor when they registered for use of EagleView Technologies Services. It remains the property of EagleView Technologies and may be reproduced and distributed only within the requestor's company. Any reproduction or distribution to anyone outside of the requestor's company without EagleView's prior written permission is strictly prohibited. All aspects and handling of this report are subject to the Terms and Conditions previously agreed to by the requestor.

Copyright © 2008- 2015 EagleView Technologies, Inc. – All Rights Reserved – Covered by U.S. Patent Nos. 8,078,436; 8,145,578; 8,170,840; 8,209,152; 8,515,125. Other Patents Pending.

East Side

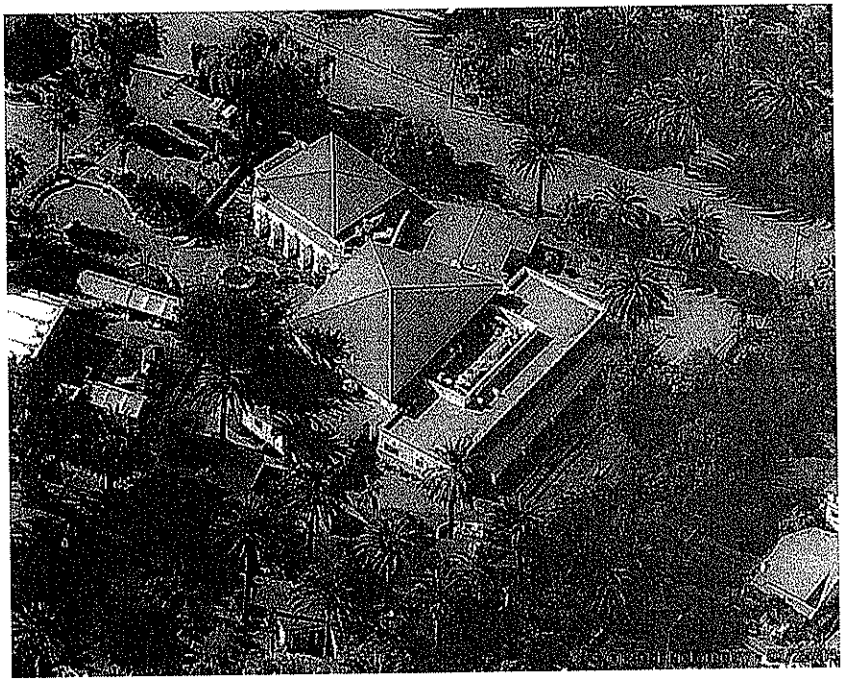

West Side

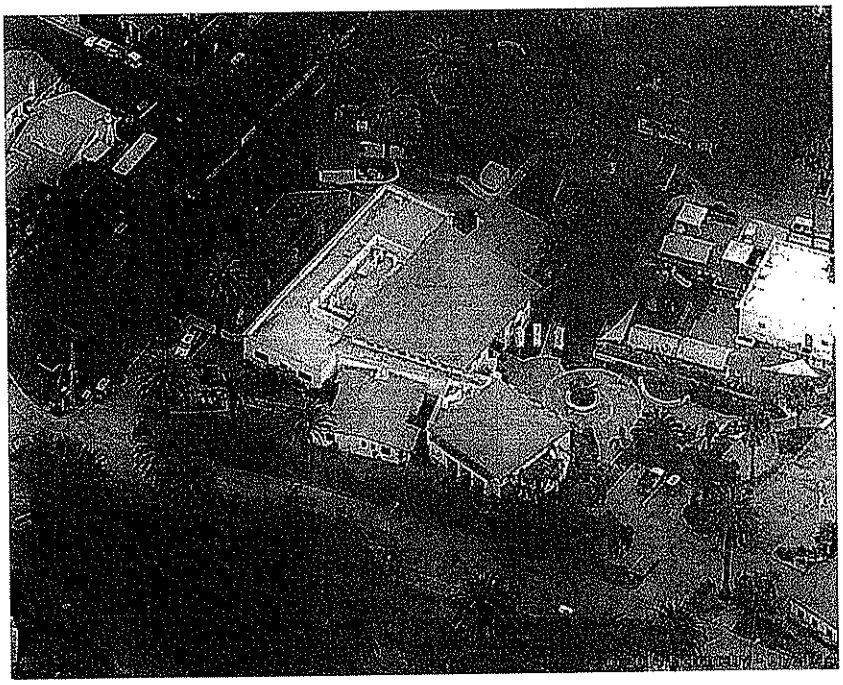

This document is provided under License by EagleView Technologies to the requestor for their Internal Use Only subject to the terms and conditions previously agreed to by the requestor when they registered for use of EagleView Technologies Services. It remains the property of EagleView Technologies and may be reproduced and distributed only within the requestor's company. Any reproduction or distribution to anyone outside of the requestor's company without EagleView's prior written permission is strictly prohibited. All aspects and handling of this report are subject to the Terms and Conditions previously agreed to by the requestor.

Copyright © 2008- 2015 EagleView Technologies, Inc. – All Rights Reserved – Covered by U.S. Patent Nos. 8,078,436; 8,145,578; 8,170,840; 8,209,152; 8,515,125. Other Patents Pending.

Length Diagram

Total Line Lengths:
Ridges = 72 ft
Hips = 292 ft

Valleys = 0 ft
Rakes = 131 ft
Eaves = 542 ft

Flashing = 4 ft
Step flashing = 75 ft
Parapets = 754 ft

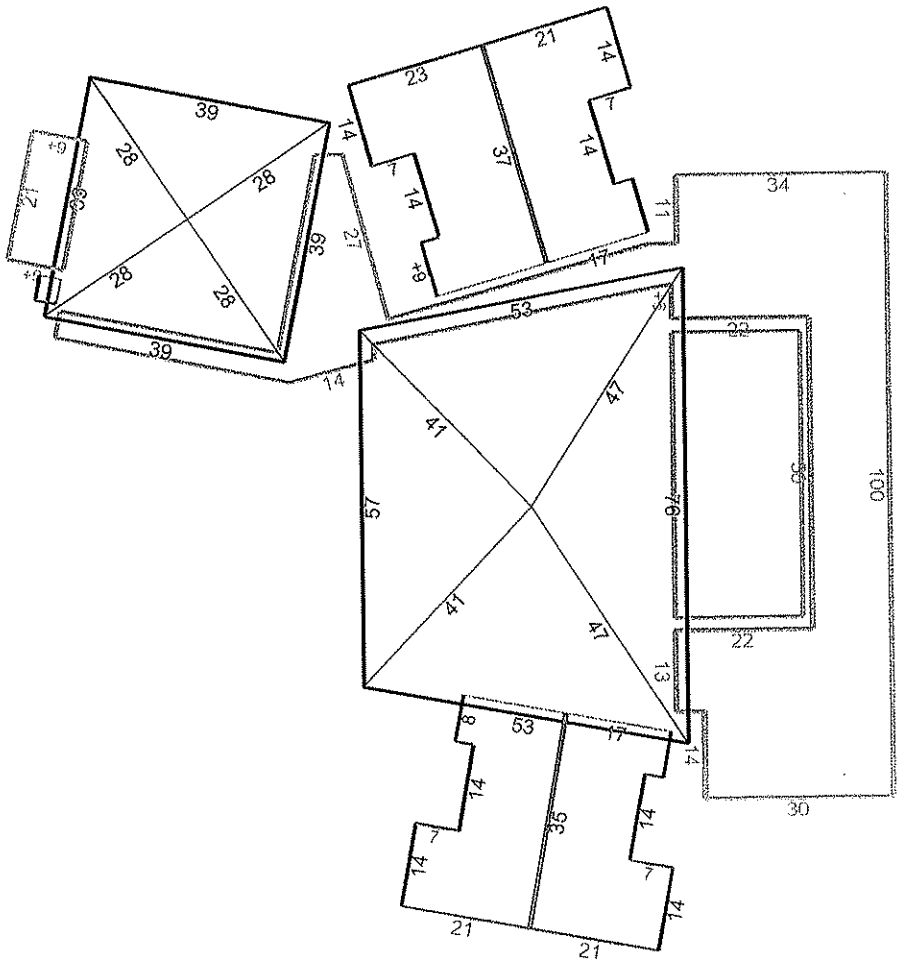

Note: This diagram contains segment lengths (rounded to the nearest whole number) over 5 feet. In some cases, segment labels have been removed for readability. Plus signs preface some numbers to avoid confusion when rotated (e.g. +6 and +9).

This document is provided under License by EagleView Technologies to the requestor for their Internal Use Only subject to the terms and conditions previously agreed to by the requestor when they registered for use of EagleView Technologies Services. It remains the property of EagleView Technologies and may be reproduced and distributed only within the requestor's company. Any reproduction or distribution to anyone outside of the requestor's company without EagleView's prior written permission is strictly prohibited. All aspects and handling of this report are subject to the Terms and Conditions previously agreed to by the requestor.

Copyright © 2008- 2015 EagleView Technologies, Inc. – All Rights Reserved – Covered by U.S. Patent Nos. 8,078,436; 8,145,578; 8,170,840; 8,209,152; 8,515,125. Other Patents Pending.

Pitch Diagram

Pitch values are shown in inches per foot, and arrows indicate slope direction. The predominant pitch on this roof is 0/12.

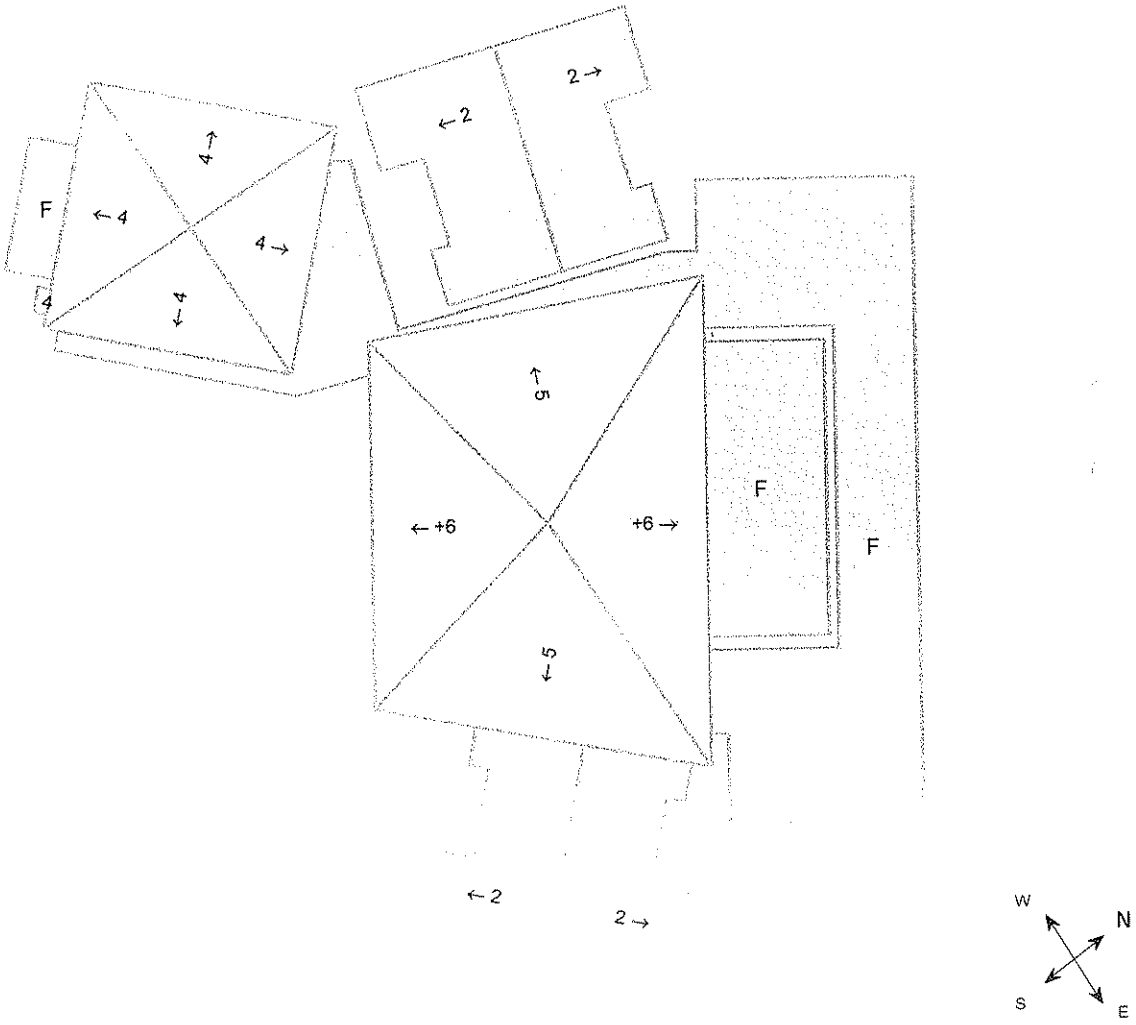

Note: This diagram contains labeled pitches for facet areas larger than 20 square feet. In some cases, pitch labels have been removed for readability. Blue shading indicates a pitch of 3/12 and greater. Gray shading indicates flat, 1/12 or 2/12 pitches. If present, a value of "F" indicates a flat facet (no pitch).

This document is provided under License by EagleView Technologies to the requestor for their Internal Use Only subject to the terms and conditions previously agreed to by the requestor when they registered for use of EagleView Technologies Services. It remains the property of EagleView Technologies and may be reproduced and distributed only within the requestor's company. Any reproduction or distribution to anyone outside of the requestor's company without EagleView's prior written permission is strictly prohibited. All aspects and handling of this report are subject to the Terms and Conditions previously agreed to by the requestor.

Copyright © 2008- 2015 EagleView Technologies, Inc. – All Rights Reserved – Covered by U.S. Patent Nos. 8,078,436; 8,145,578; 8,170,840; 8,209,152; 8,515,125. Other Patents Pending.

Area Diagram

Total Area = 12,161 sq ft, with 16 facets.

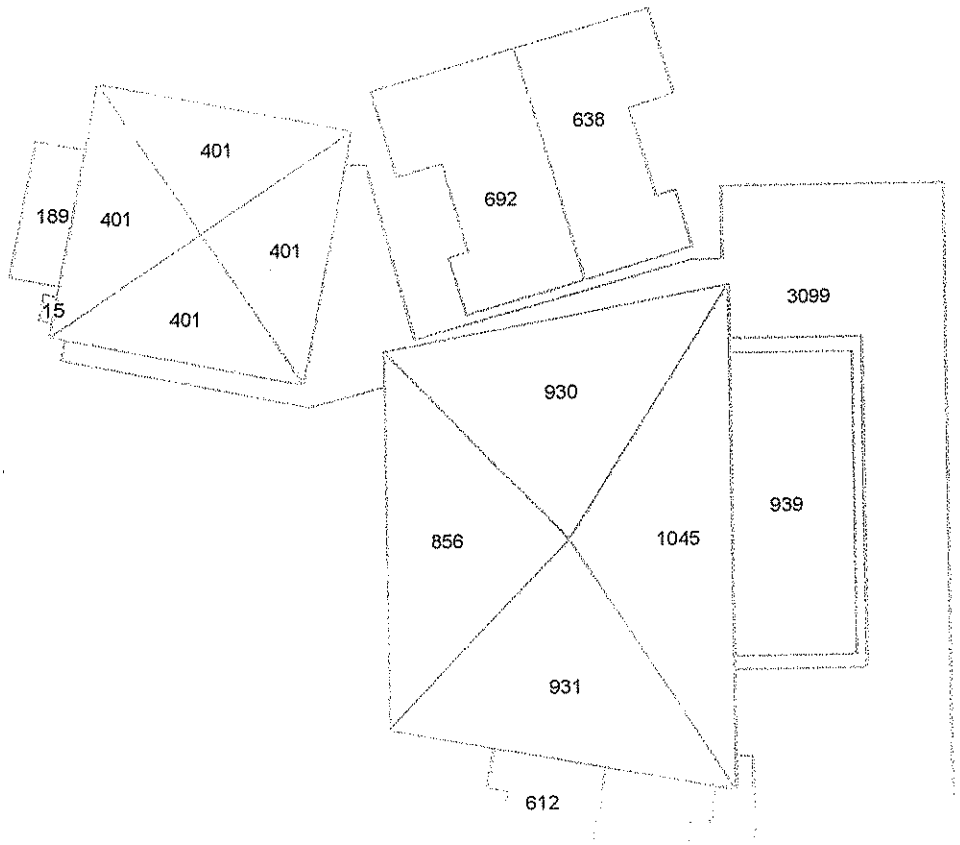

612

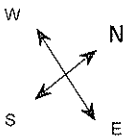

Note: This diagram shows the square feet of each roof facet (rounded to the nearest foot). The total area in square feet, at the top of this page, is based on the non-rounded values of each roof facet (rounded to the nearest square foot after being totaled).

This document is provided under License by EagleView Technologies to the requestor for their Internal Use Only subject to the terms and conditions previously agreed to by the requestor when they registered for use of EagleView Technologies Services. It remains the property of EagleView Technologies and may be reproduced and distributed only within the requestor's company. Any reproduction or distribution to anyone outside of the requestor's company without EagleView's prior written permission is strictly prohibited. All aspects and handling of this report are subject to the Terms and Conditions previously agreed to by the requestor.

Copyright © 2008- 2015 EagleView Technologies, Inc. – All Rights Reserved – Covered by U.S. Patent Nos. 8,078,436; 8,145,578; 8,170,840; 8,209,152; 8,515,125. Other Patents Pending.

Notes Diagram

Roof facets are labeled from smallest to largest (A to Z) for easy reference.

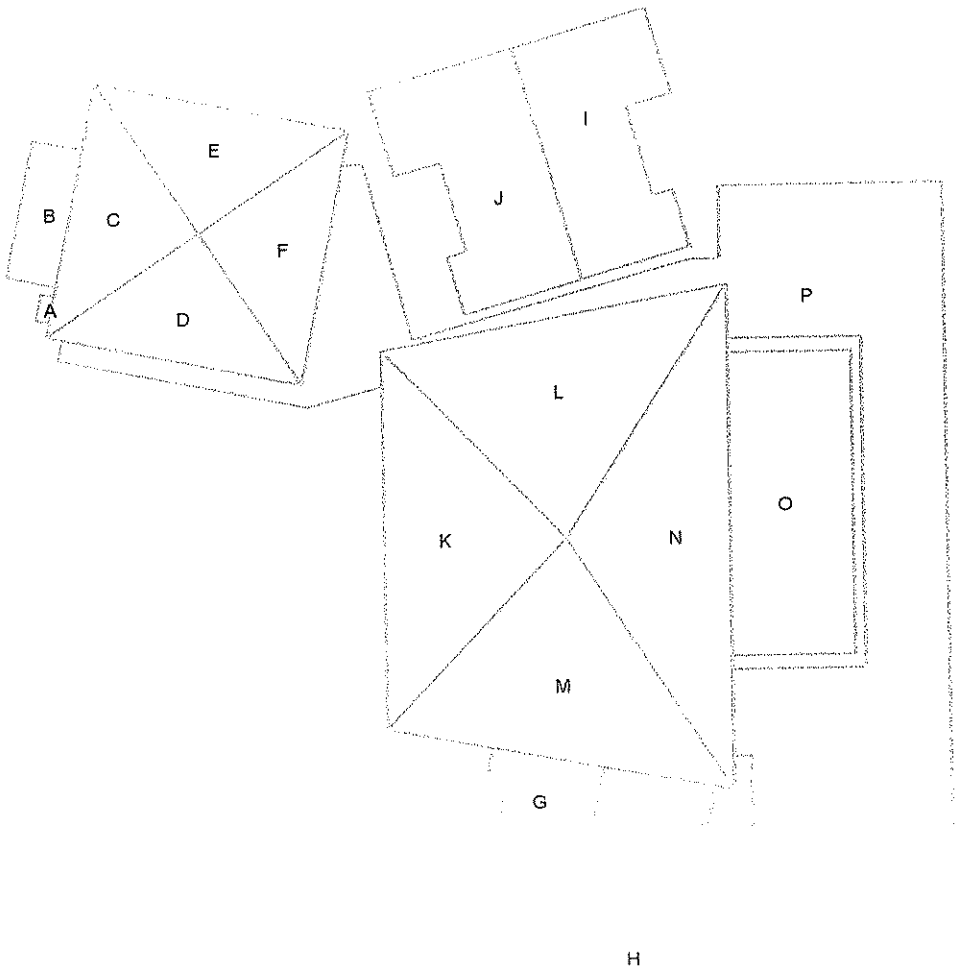

Report: 11303444

This document is provided under License by EagleView Technologies to the requestor for their Internal Use Only subject to the terms and conditions previously agreed to by the requestor when they registered for use of EagleView Technologies Services. It remains the property of EagleView Technologies and may be reproduced and distributed only within the requestor's company. Any reproduction or distribution to anyone outside of the requestor's company without EagleView's prior written permission is strictly prohibited. All aspects and handling of this report are subject to the Terms and Conditions previously agreed to by the requestor.

Copyright © 2008- 2015 EagleView Technologies, Inc. – All Rights Reserved – Covered by U.S. Patent Nos. 8,078,436; 8,145,578; 8,170,840; 8,209,152; 8,515,125. Other Patents Pending.

Penetrations Notes Diagram

Penetrations are labeled from smallest to largest for easy reference.

Total Penetrations = 23
Total Penetrations Perimeter = 342 ft

Total Penetrations Area = 298 sq ft
Total Roof Area Less Penetrations = 11,863 sq ft

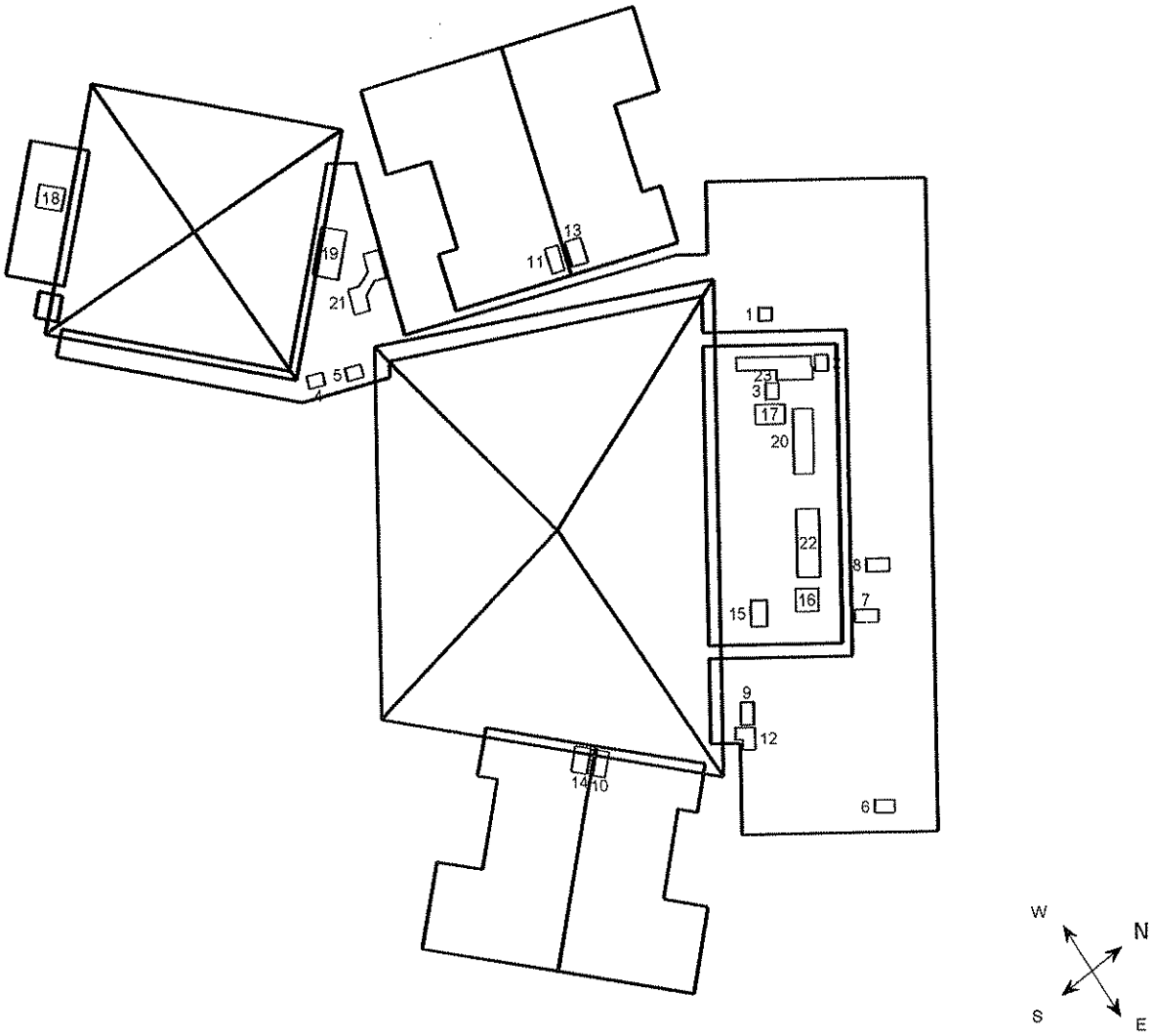

Report: 11303444

This document is provided under License by EagleView Technologies to the requestor for their Internal Use Only subject to the terms and conditions previously agreed to by the requestor when they registered for use of EagleView Technologies Services. It remains the property of EagleView Technologies and may be reproduced and distributed only within the requestor's company. Any reproduction or distribution to anyone outside of the requestor's company without EagleView's prior written permission is strictly prohibited. All aspects and handling of this report are subject to the Terms and Conditions previously agreed to by the requestor.

Copyright © 2008- 2015 EagleView Technologies, Inc. – All Rights Reserved – Covered by U.S. Patent Nos. 8,078,436; 8,145,578; 8,170,840; 8,209,152; 8,515,125. Other Patents

Report Summary

Below is a measurement summary using the values presented in this report.

Areas per Pitch

Roof Pitches	0/12	2/12	4/12	5/12	6/12
Area (sq ft)	4227.5	2553.5	1618	1861	1900.8
% of Roof	34.8%	21%	13.3%	15.3%	15.6%

The table above lists each pitch on this roof and the total area and percent (both rounded) of the roof with that pitch.

Waste Calculation Table

Waste %	0%	10%	12%	15%	17%	20%	22%
Area (sq ft)	12,161	13,377	13,620	13,985	14,228	14,593	14,836
Squares	121.6	133.8	136.2	139.9	142.3	145.9	148.4

This table shows the total roof area and squares (rounded up to the nearest decimal) based upon different waste percentages. The waste factor is subject to the complexity of the roof, individual roofing techniques and your experience. Please consider this when calculating appropriate waste percentages. Note that only roof area is included in these waste calculations. Additional materials needed for ridge, hip, valley, and starter lengths are not included.

Penetrations	1	2-5	6	7-9	10	11	12	13-15	16	17
Area (sq ft)	4	5	6	7	7.6	8.3	8.8	10	12.3	13.5
Perimeter (ft)	8	9	10	11	11.8	12.2	13	13	14	15
	18	19	20	21	22	23				
Area (sq ft)	14	30	30	24.2	36.7	31.5				
Perimeter (ft)	15	23	26	27.6	28	30.4				

Any measured penetration smaller than 3x3 feet may need field verification. Accuracy is not guaranteed. The total penetration area is not subtracted from the total roof area.

Lengths, Areas and Pitches

Ridges = 72 ft (2 Ridges)
Hips = 292 ft (8 Hips).
Valleys = 0 ft (0 Valleys)
Rakes* = 131 ft (13 Rakes)
Eaves/Starter** = 542 ft (21 Eaves)
Drip Edge (Eaves + Rakes) = 673 ft (34 Lengths)
Parapet Walls = 754 (30 Lengths).
Flashing = 4 ft (1 Lengths)
Step flashing = 75 ft (5 Lengths)
Total Area = 12,161 sq ft
Total Penetrations Area = 298 sq ft
Total Roof Area Less Penetrations = 11,863 sq ft
Total Penetrations Perimeter = 342 ft
Predominant Pitch = 0/12

Property Location

Longitude = -118.3285538
Latitude = 33.3400375

Notes

This was ordered as a commercial property.

Total Roof Facets = 16
Total Penetrations =23

Parapet Wall Area Table

Wall Height (ft)	1	2	3	4	5	6	7

* Rakes are defined as roof edges that are sloped (not level).
** Eaves are defined as roof edges that are not sloped and level.

EAGLEVIEW TECHNOLOGIES Report: 11303444

This document is provided under License by EagleView Technologies to the requestor for their Internal Use Only subject to the terms and conditions previously agreed to by the requestor when they registered for use of EagleView Technologies Services. It remains the property of EagleView Technologies and may be reproduced and distributed only within the requestor's company. Any reproduction or distribution to anyone outside of the requestor's company without EagleView's prior written permission is strictly prohibited. All aspects and handling of this report are subject to the Terms and Conditions previously agreed to by the requestor.

Copyright © 2008- 2015 EagleView Technologies, Inc. – All Rights Reserved – Covered by U.S. Patent Nos. 8,078,436; 8,145,578; 8,170,840; 8,209,152; 8,515,125. Other Patents Pending.

Vertical Wall Area (sq ft)	754	1508	2262	3016	3770	4524	5278

This table provides common parapet wall heights to aid you in calculating the total vertical area of these walls. Note that these values assume a 90 degree angle at the base of the wall. Allow for extra materials to cover cant strips and tapered edges.

Online Maps

Online map of property
http://maps.google.com/maps?f=q&source=s_q&hl=en&geocode=&q=410+Avalon+Canyon+Rd,Avalon,CA,90704
Directions from Western States Roof Systems, Inc. to this property
http://maps.google.com/maps?f=d&source=s_d&saddr=18605+Parthenia+Street,Northridge,CA,91324&daddr=410+Avalon+Canyon+Rd,Avalon,CA,90704

This document is provided under License by EagleView Technologies to the requestor for their Internal Use Only subject to the terms and conditions previously agreed to by the requestor when they registered for use of EagleView Technologies Services. It remains the property of EagleView Technologies and may be reproduced and distributed only within the requestor's company. Any reproduction or distribution to anyone outside of the requestor's company without EagleView's prior written permission is strictly prohibited. All aspects and handling of this report are subject to the Terms and Conditions previously agreed to by the requestor.

Copyright © 2008- 2015 EagleView Technologies, Inc. – All Rights Reserved – Covered by U.S. Patent Nos. 8,078,436; 8,145,578; 8,170,840; 8,209,152; 8,515,125. Other Patents Pending.

Western States Roofing, Inc.

License #993251

18605 Parthenia Street
Northridge, CA 91324

(818) 718-0770 - Phone
(818) 718-1240 - Fax

This agreement is between:
Western States Roofing, Inc. (a licensed California contractor) herein referred to as "WSR or Contractor "and

Name City of Avalon (hereinafter referred to as Buyer or Owner) Salesman: Shawn Reeves 818-416-0706

Address 410 Avalon Canyon City: Avalon State CA Zip 90704

Phone 310-510-0220 Fax: Cellular: E-Mail:

IN CONSIDERATION of the promises herein contained, it is mutually agreed as follows:

1. **CONSTRUCTION:** Contractor promises to furnish the necessary labor, material and equipment and to perform in a workmanlike manner and complete for the owners at Same as above the following work as detailed :

2. **SPECIFICATIONS:**
   a) Remove existing roof membrane 10'x 10'
   b) Replace dry rot sheeting and reinforce "T" joist as needed
   c)
   d)

2. **WARRANTANY:**
   Manufacturer guarantees material specified above for a period of: ____Year(s)
   Workmanship guarantee with the same terms of warranty on reverse side of this contract for: ____Year(s)

3. **WOOD REPLACEMENT:**
   The following additional charges will apply for replacement of dry rotted or termite infested wood:
   $ 4.60 per Linear Foot - 1 x 4, 1 x 6, 1 x 8 $ 6.40 per Linear Foot - 2 x 4, 2 x 6, 2 x 8
   $ 62.00 per 4' x 8' sheet - ½" CDX Plywood

4. **EXCLUSION(S):**
   The following items are excluded from this Agreement (unless otherwise specified above):
   Dry Rot Replacement, All Sheet Metal Items, Lead Flashings, Insulation, Tapered Crickets, Walk Pads, Wood Nailers, Wavier of Subrogation Insurance, Bonding

5. **CONTRACT PRICE:**
   Owner promises to pay or cause to be paid to Contractor in consideration therefore, the "Cash Price"sum of
   $ 3,660.00 *** (*** Three Thousand Six Hundred Sixty *** Dollars & 00 /100 **)

6. **PAYMENT TERMS:**
   $ ____ Deposit upon Signing, Balance to Be Paid As Follows:

7. **TIME FOR COMPLETION:** The work to be performed by Contractor shall be commenced within approximately 20 business days from date of execution of this agreement and shall be substantially completed within approximately 20 days of said date of commencement. Contractor, however shall not be liable for any delays or variations from the foregoing completion schedule which are caused by factors beyond the control of Contractor (such as, but not limited to: rain or other acts of God; acts of war or civil disturbance; and strikes boycotts, or other obstructive actions by labor organizations or employees, or lock-outs or other defensive actions by employers) – or which are caused by acts or neglect of Owner. In the event that any delay or variation from foregoing completion schedule is caused by any of such factors, a reasonable extension of time for commencement and completion shall automatically be deemed to have been granted. For purposes of this paragraph, "a reasonable extension of time" shall include sufficient time to allow Contractor to commence and complete his obligations under contract agreements with other parties which were originally scheduled for commencement prior to the commencement date of this Contract, and Contractor shall be entitled to complete said other Contract obligations prior to the commencement of work on this Contract.

8. **STIPULATIONS:** Now, therefore, the Owner hereby accepts the above proposal, and the Contractor agrees to perform the work comprehended there under, and by and between them as part and parcel of this Agreement the terms and conditions set forth in original writing on the reverse side hereof are understood and agreed upon.

Buyer hereby authorizes Seller or successors to make whatever inquiries or investigation regarding Buyer's credit rating as Seller deems appropriate.

NOTICE TO THE BUYER: Do not sign this Agreement before you read it or if it contains any blank space. You are entitled to a completely filled in copy of this Agreement. Owner acknowledges that he has read and received a legible copy of this Agreement signed by Contractor, including all terms and conditions on the back, before any work was done, and that he has read and received a legible copy of every other document that Owner has signed during the contract negotiations.

Note:
This proposal is hereby canceled if not accepted within 30 days from date of signature of owner.

"YOU, THE BUYER, MAY CANCEL THIS TRANSACTION AT ANY TIME IN WRITTEN FORM PRIOR TO MIDNIGHT OF THE THIRD BUSINESS DAY AFTER THE DATE OF THIS TRANSACTION." CANCELLATION MUST BE RECEIVED BY CONTRACTOR IN WRITING VIA CERTIFIED MAIL OR BY PERSONAL DELIVERY TO A NAMED REPRESENTATIVE OF ONLY.

ACCEPTANCE:
This Contract is approved and accepted. I (we) understand there are no oral agreements or understandings between the parties of this contract. The written terms, provisions, plan (if any) and specifications in this contract are the entire agreement between the parties. Changes in this agreement shall be done by written change order only and with the express approval of both parties. Changes may incur additional charges.

Western States Roofing, Inc.

By: _____
REPRESENTATIVE

Date: August 19, 2015

Owner (Buyer)

X _____
OWNER'S SIGNATURE

X Date: _____

PLEASE PAY IMMEDIATELY UPON COMPLETION

Western States Roofing, Inc.

License #993251

18605 Parthenia Street
Northridge, CA 91324

(818) 718-0770 - Phone
(818) 718-1240 - Fax

This agreement is between:
Western States Roofing, Inc. (a licensed California contractor) herein referred to as "WSR or Contractor "and

Name City of Avalon (hereinafter referred to as Buyer or Owner) Salesman: Shawn Reeves 818-416-0706

Address 410 Avalon Canyon City: Avalon State CA Zip 90704

Phone 310-510-0220 Fax: Cellular: E-Mail:

IN CONSIDERATION of the promises herein contained, it is mutually agreed as follows:

1. CONSTRUCTION: Contractor promises to furnish the necessary labor, material and equipment and to perform in a workmanlike manner and complete for the owners at Same as above the following work as detailed :

2. SPECIFICATIONS: Installing GACO 20 yr system:
   a) Power wash roof with high pressure hose and clean roof
   b) Install GACO Flex Sealant at all roof penetrations
   c) Apply GACO Flex Epoxy Primer at 250 square feet per gallon
   c) Apply GACO Flex S 2000 at a rate of 2.5 gallon per 100 square feet
   d) All base flashing and walls will receive the same
   e) Install walk pads where shown on plans
   f) Roof Tile:
   g) Remove and salvage existing concrete roofing tiles, and inspect for dry rot
   h) Apply Garland TamShield Water & Ice self-adhered membrane over existing wood substrate w/ roof penetration sub flashing per NRCA Manual.
   i) Wrap all hip & ridge board with Garland Tam Shield membrane
   j) Re-install existing concrete tile with PolyFoam Pro Pac 100, replacing damaged or missing pieces with new to match as closely as possible
   k) Seal all pipes and vents, and paint to match tile color as closely as possible
   l) Provide and install concrete mortar mix to all hips & ridges
   m) Clean up and haul away all related trash and debris daily

2. WARRANTANY:
   Manufacturer guarantees material specified above for a period of: 20 – GACO, N/A Year(s)
   Workmanship guarantee with the same terms of warranty on reverse side of this contract for: 5 – GACO, 10 - TILE Year(s)

3. WOOD REPLACEMENT:
   The following additional charges will apply for replacement of dry rotted or termite infested wood:
   $ 4.60 per Linear Foot - 1 x 4, 1 x 6, 1 x 8 $ 6.40 per Linear Foot - 2 x 4, 2 x 6, 2 x 8
   $ 62.00 per 4' x 8' sheet - ½" CDX Plywood

4. EXCLUSION(S):
   The following items are excluded from this Agreement (unless otherwise specified above):
   Dry Rot Replacement, All Sheet Metal Items, Lead Flashings, Insulation, Tapered Crickets, Walk Pads, Wood Nailers, Wavier of Subrogation Insurance, Bonding

5. CONTRACT PRICE:
   Owner promises to pay or cause to be paid to Contractor in consideration therefore, the "Cash Price"sum of
   $ 40,000.00 *** (*** Forty Thousand *** Dollars & 00 /100 **)

6. PAYMENT TERMS:
   $ ____ Deposit upon Signing, Balance to Be Paid As Follows:

7. TIME FOR COMPLETION: The work to be performed by Contractor shall be commenced within approximately 20 business days from date of execution of this agreement and shall be substantially completed within approximately 20 days of said date of commencement. Contractor, however shall not be liable for any delays or variations from the foregoing completion schedule which are caused by factors beyond the control of Contractor (such as, but not limited to: rain or other acts of God; acts of war or civil disturbance; and strikes boycotts, or other obstructive actions by labor organizations or employees, or lock-outs or other defensive actions by employers) – or which are caused by acts or neglect of Owner. In the event that any delay or variation from foregoing completion schedule is caused by any of such factors, a reasonable extension of time for commencement and completion shall automatically be deemed to have been granted. For purposes of this paragraph, "a reasonable extension of time" shall include sufficient time to allow Contractor to commence and complete his obligations under contract agreements with other parties which were originally scheduled for commencement prior to the commencement date of this Contract, and Contractor shall be entitled to complete said other Contract obligations prior to the commencement of work on this Contract.

8. STIPULATIONS: Now, therefore, the Owner hereby accepts the above proposal, and the Contractor agrees to perform the work comprehended there under, and by and between them as part and parcel of this Agreement the terms and conditions set forth in original writing on the reverse side hereof are understood and agreed upon.

Buyer hereby authorizes Seller or successors to make whatever inquiries or investigation regarding Buyer's credit rating as Seller deems appropriate.

NOTICE TO THE BUYER: Do not sign this Agreement before you read it or if it contains any blank space. You are entitled to a completely filled in copy of this Agreement. Owner acknowledges that he has read and received a legible copy of this Agreement signed by Contractor, including all terms and conditions on the back, before any work was done, and that he has read and received a legible copy of every other document that Owner has signed during the contract negotiations.

Note:
This proposal is hereby canceled if not accepted within 30 days from date of signature of owner.

"YOU, THE BUYER, MAY CANCEL THIS TRANSACTION AT ANY TIME IN WRITTEN FORM PRIOR TO MIDNIGHT OF THE THIRD BUSINESS DAY AFTER THE DATE OF THIS TRANSACTION." CANCELLATION MUST BE RECEIVED BY CONTRACTOR IN WRITING VIA CERTIFIED MAIL OR BY PERSONAL DELIVERY TO A NAMED REPRESENTATIVE OF ONLY.

ACCEPTANCE:
This Contract is approved and accepted. I (we) understand there are no oral agreements or understandings between the parties of this contract. The written terms, provisions, plan (if any) and specifications in this contract are the entire agreement between the parties. Changes in this agreement shall be done by written change order only and with the express approval of both parties. Changes may incur additional charges.

Western States Roofing, Inc.

By: _____
REPRESENTATIVE

Date: August 19, 2015

Owner (Buyer)

X _____
OWNER'S SIGNATURE

X Date: _____

PLEASE PAY IMMEDIATELY UPON COMPLETION

FINE LINE CONSTRUCTION, INC.
GENERAL CONTRACTORS
SANTA CATALINA ISLAND

Proposal/Contract

THIS PROPOSAL IS GOOD FOR 30 DAYS

Submitted To:
Dennis Jaich
City of Avalon
410 Avalon Canyon Rd.
Avalon, CA 90704

Date: June 19, 2015

Job Site Address:
410 Avalon Canyon Rd.

At the City of Avalon building, there are several evident roof leaks; two in the finance department and one in the building and safety area, both below tiled roof areas. There is an additional leak in the office behind finance that is below a flat roofed area. We propose to address the leaks in the following manner. All work includes material, labor, equipment, water freight, land freight, delivery, lodging and transportation.

1) Tiled Roof Areas over 2/12 Pitch at North and South Sides of Building. The current 2/12 pitch roofing system is concrete tile over one layer of 30 lb. felt with batton strips. This not per code and will deteriorate further as time goes on. As such, we propose to remove the existing low-profile tile, remove the wood batton strips, install 2 new layers of PU-30 peel and stick membrane, install new flow-through plastic battons and re-install tile per specifications. We will also remove and haul away the two fake "chimney's", one at the north and one at the south side and place new roofing in those locations. There is no repair of interior water damage included as in pertains to tile roof areas.

   $32,115

2) Flat Roof Area. At one office location behind the finance area, an evident roof leak has caused damage to the roof framing system. We have examined this area and cannot see any obvious causes of a leaking roof. As such, our concern is that the stucco parapet wall may be papered incorrectly and allowing water to enter the building. As such, we propose to remove not more than 20 square feet of stucco in the area directly adjacent to the leak and look for the cause. If the cause can be located within this area, we will repair it and re-stucco the area to match the existing color and texture as close as possible. If we have to remove more stucco and keep searching, this will be at additional cost agreed to by both Owner and Contractor prior to commencement of work.

   After the leak is repaired, we will repair the damage to the roof framing system by replacing (2) 20'x11-7/8" I-Joists, (1) 5' piece of joist ledger and (1) 4'x5' piece of roof sheeting. Unfortunately, this work will have to be completed from above, necessitating the removal and patching of approximately 100 square feet of roofing. We will haul away the removed roofing and replace it using a torch-down system.

   $10,910

Any work not mentioned about will be dealt with on a case-by-case basis, using signed change orders, and be considered extra work.

All permits and fees are the responsibility of owner. Owner to supply electricity and water at building site for contractor's tasks.

409 Beacon Street | P.O. Box 2703 | Avalon CA 90704
Ph: (310) 510-1943 | Fax: (310) 510-2126

Contractor will submit invoice to owner not more than twice per month; these will be progress payments based upon percentage of completion.

Acceptance of proposal: The above price, specifications and conditions are satisfactory and are hereby accepted. You are authorized to do the work as specified for $43,025. Payment will be made as shown.

Submitted By:

Brian Tucker

Brian Tucker, Fine Line Construction

Accepted By:

City of Avalon

CITY OF AVALON CITY COUNCIL

MEETING DATE: September 1, 2015 **AGENDA ITEM:** 4

ORIGINATING DEP: Planning/Administration **CITY MANAGER:** BH

PREPARED BY: Audra McDonald, Administrative Analyst
Jordan Monroe, Management Aide

SUBJECT: Consideration of a Resolution to Designate Agents for Matters Relating to the State of California Emergency Management Agency for State Disaster Assistance.

RECOMMENDED ACTION(S): Adopt the Resolution designating the Management Aide, Administrative Analyst or City Manager as authorized agents for matters relating to the State of California Management Agency for State Disaster Assistance.

REPORT SUMMARY: The City of Avalon experienced two major and damaging weather related events in 2014. Hurricane Marie which occurred August 26, 2014, and the Complex Incident which occurred December 30, 2014. The City Council adopted Resolutions 14-25 and 15-01 respectively, proclaiming the events a local emergency. Per the directives of the Resolutions, City staff forwarded the Resolutions to the Director of the California Governor's Office of Emergency Services requesting the State declare a state of emergency .

The City was notified via a letter sent June 12, 2015, from Mark S. Ghilarducci, Director of Cal OES, that although a gubernatorial proclamation was not warranted, a "Director's Concurrence" was authorized to assist the City with it's recovery efforts. In order to apply for assistance, the City must have a current resolution designating City employees who are authorized to act on behalf of the City.

GOAL ALIGNMENT: Not aligned.

FISCAL IMPACTS: The fiscal impacts are unknown, but will not be negative.

CONSEQUENCES OF NOT FOLLOWING RECOMMENDED ACTION: The City will not be able to apply and possibly receive financial assistance for damages sustained by Hurricane Marie and the Complex Incident.

FOLLOW UP ACTION: If Council concurs with recommended action forward the adopted Resolution to the California Office of Emergency Services.

ADVERTISING, NOTICE AND PUBLIC CONTACT: Pursuant to the Brown Act.

ATTACHMENTS:

1. Resolution Designating Agents
2. Cal OES Director's Concurrence Letter
3. Resolution 14-25
4. Resolution 15-01

STATE OF CALIFORNIA
CALIFORNIA EMERGENCY MANAGEMENT AGENCY
Cal EMA 130

Disaster No: CDAA-2015-02
Cal EMA ID No: _____

DESIGNATION OF APPLICANT'S AGENT RESOLUTION FOR NON-STATE AGENCIES

BE IT RESOLVED BY THE City Council (Governing Body) OF THE City of Avalon (Name of Applicant)

THAT Administrative Analyst (Title of Authorized Agent), OR
Management Aide (Title of Authorized Agent), OR
City Manager (Title of Authorized Agent)

is hereby authorized to execute for and on behalf of the City of Avalon (Name of Applicant), a public entity established under the laws of the State of California, this application and to file it with the California Emergency Management Agency for the purpose of obtaining certain federal financial assistance under Public Law 93-288 as amended by the Robert T. Stafford Disaster Relief and Emergency Assistance Act of 1988, and/or state financial assistance under the California Disaster Assistance Act.

THAT the City of Avalon (Name of Applicant), a public entity established under the laws of the State of California, hereby authorizes its agent(s) to provide to the California Emergency Management Agency for all matters pertaining to such state disaster assistance the assurances and agreements required.

Please check the appropriate box below:

☐ This is a universal resolution and is effective for all open and futures disasters up to three (3) years following the date of approval below.
☐ This is a disaster specific resolution and is effective for only disaster number(s) _____

Passed and approved this 1st day of September, 20 15

Ann H. Marshall, Mayor
(Name and Title of Governing Body Representative)

_____
(Name and Title of Governing Body Representative)

_____
(Name and Title of Governing Body Representative)

CERTIFICATION

I, Ann H. Marshall (Name), duly appointed and Mayor (Title) of City of Avalon (Name of Applicant), do hereby certify that the above is a true and correct copy of a Resolution passed and approved by the City Council (Governing Body) of the City of Avalon (Name of Applicant) on the 1st day of September, 20 15.

_____ (Signature) _____ (Title)

Cal EMA Form 130
Instructions

A new Designation of Applicant's Agent Resolution for Non-State Agencies is required if the previously submitted document is older than three (3) years from the last date of approval.

When completing the Cal EMA Form 130, Applicants should fill in the blanks on page 1. The blanks are to be filled in as follows:

Resolution Section:

Governing Body: This is the individual or group responsible for appointing and approving the Authorized Agents. Examples include: Board of Directors, City Council, Board of Supervisors, etc.

Name of Applicant: This is the official name of the non-profit, agency, city, or county that has applied for the grant. Examples include: Sacramento Public Water Works; City of Sacramento; or Sacramento County.

Authorized Agent: These are the individuals that are authorized by the Governing Body to engage with the Federal Emergency Management Agency and the California Emergency Management Agency regarding grants applied for by the Applicant. There are two ways of completing this section:

1. Titles Only: If the Governing Body so chooses, the titles of the Authorized Agents should be entered here, not their names. This allows the document to remain valid if an Authorized Agent leaves the position and is replaced by another individual. If "Titles Only" is the chosen method, this document must be accompanied by a cover letter naming the Authorized Agents by name and title. This cover letter can be completed by any authorized person within the agency (e.g.; City Clerk, the Authorized Agent, Secretary to the Director) and does not require the Governing Body's signature.

2. Names and Titles: If the Governing Body so chooses, the names and titles of the Authorized Agents should be listed. A new Cal EMA Form 130 will be required if any of the Authorized Agents are replaced, leave the position listed on the document or their title changes.

Governing Body Representative: These are the names and titles of the approving board members. Examples include: Chairman of the Board, Director, Superintendent, etc. The names and titles cannot be one of the designated Authorized Agents.

Certification Section:

Name and Title: This is the individual that was in attendance and recorded the Resolution creation and approval. Examples include: City Clerk, Secretary to the Board of Directors, County Clerk, etc. This person cannot be one of the designated Authorized Agents to eliminate "Self Certification."

EDMUND G. BROWN JR.
GOVERNOR

MARK S. GHILARDUCCI
DIRECTOR

Cal OES
GOVERNOR'S OFFICE
OF EMERGENCY SERVICES

June 12, 2015

The Honorable Ann Marshall
City of Avalon
Post Office Box 707
Avalon, California 90704

Dear Mayor Marshall:

This letter is in response to the City of Avalon's (City) requests seeking a gubernatorial State of Emergency, California Disaster Assistance Act (CDAA) funding, and a presidential disaster declaration as a result of Hurricane Marie, commencing August 26, 2014, and the Avalon Complex, commencing December 30, 2014.

In accordance with the California Emergency Services Act, the governor is empowered to proclaim a State of Emergency when extreme peril exists and when the severity and magnitude of an incident is beyond the capabilities of the local jurisdiction. As a result of the assessments conducted, a threat to lives or public safety, which would require the expanded emergency powers of a gubernatorial proclamation, was not present. Although the authorities and resources triggered by a governor's proclamation of emergency were deemed to be unwarranted, a Director's Concurrence was authorized (CDAA-2015-02) to assist the City with its recovery efforts. Please be advised, under a Director's Concurrence, only those repairs that constitute permanent work as defined in *Title 19* of the *California Code of Regulations, Section 2940,* may be eligible for funding. In order to assist the City with the reimbursement process, my staff, under separate correspondence, will provide instructions and copies of the forms necessary to apply for assistance under CDAA.

Please know Cal OES will continue to work closely with your team during the recovery efforts and please feel free to contact me directly at (916) 845-8506 if you have any additional questions or if you would like to discuss this matter further.

Sincerely,

MARK S. GHILARDUCCI
Director

3650 SCHRIEVER AVENUE, MATHER, CA 95655
(916) 845-8506 TELEPHONE (916) 845 8511 FAX

City of Avalon Notification of CDAA Approval under a Director's Concurrence

cc: Mr. Charles Rabamad, Assistant Director, Recovery Section, Cal OES
Ms. Mona Bontty, Southern Region Administrator, Cal OES
Ms. Stacy Mason-Vegna, Recovery Infrastructure Branch Chief, Recovery Section, Cal OES
Ms. Tamara Scott, Emergency Services Coordinator, Recovery Section, Cal OES
Mr. Dave Gillings, Public Assistance Officer, Recovery Section, Cal OES

RESOLUTION NO. 14-25

RESOLUTION OF THE CITY COUNCIL OF THE CITY OF AVALON PROCLAIMING EXISTENCE OF A LOCAL EMERGENCY

WHEREAS, Ordinance No. 670 (1979) of the City of Avalon empowers the Director of Emergency Services (City Manager) to request the City Council to proclaim the existence or threatened existence of a local emergency; and

WHEREAS, the City Council has been requested by the Director of Emergency Services of said City to proclaim the existence of a local emergency therein; and

WHEREAS, the City Council does hereby find:

1. That conditions of extreme peril to the safety of persons and property have arisen within the City of Avalon and Santa Catalina Island, caused by the ocean surge and high tides caused by Hurricane Marie commencing on or about 10:00 p.m. on the 26th day of August, 2014;

2. That the condition and initial assessment of damage to City infrastructure facilities, as outlined in the attached **Exhibit A**, will exceed the capability of the City to address and correct without the assistance of County, State and Federal government;

3. That the aforesaid conditions of extreme peril warrant and necessitate the proclamation of the existence of a local emergency; and

4. There is need to take certain actions to protect those who must provide emergency services.

NOW, THEREFORE, IT IS HEREBY PROCLAIMED that a local emergency now exists throughout the City of Avalon and Santa Catalina Island; and

IT IS HEREBY FURTHER PROCLAIMED AND ORDERED that during the existence of said local emergency the powers, functions, and duties of the Director of Emergency Services and the emergency organization of this City shall be those prescribed by state law, by ordinances, and resolutions of this City and/or approved by the City Council on September 2, 2014.

IT IS FURTHER PROCLAIMED AND ORDERED that said local emergency shall be deemed to continue to exist until its termination is proclaimed by the City Council of the City of Avalon, State of California.

IT IS FURTHER PROCLAIMED AND ORDERED that the Director of Emergency Services is directed to pursue all available funding and assistance for repairs, emergency services, clean up and other necessary steps to respond to the local emergency as well as coordinate with local, State and Federal authorities to assess the next steps available to take action to protect and preserve the public safety, health and welfare.

IT IS FURTHER PROCLAIMED AND ORDERED that the Director of Emergency Services is directed to take all appropriate actions to undertake and address the repairs and conditions noted in the attached Exhibit A as well as other conditions that may exist that are currently unknown but which were caused by the ocean surge and high tides.

IT IS FURTHER PROCLAIMED AND ORDERED that a copy of this proclamation be forwarded to the Director of California's Governor's Office of Emergency Services requested that the Director find it acceptable in accordance with State law; that the Governor of California pursuant to the Emergency Services Act, and all other appropriate powers, issue a proclamation declaring an emergency in the City of Avalon and Santa Catalina Island; that the Governor waive regulations and laws that may hinder response and recovery efforts; that recovery assistance be made available utilizing the California Disaster Assistance Act funds, State Private Nonprofit Organizations Assistance Program funds, Small Business Administration and any other local, State or Federal Funds available to mitigate this emergency which include, but are not limited to, weather response, repair and recovery costs and that the Governor request that the President of the United States make a Presidential Declaration of Emergency in and for the City of Avalon and Santa Catalina Island and make all relevant funds and assistance available to the City of Avalon, Santa Catalina Island and all eligible community members and businesses.

PASSED, APPROVED AND ADOPTED at a special meeting of the City Council of the City of Avalon on this 2nd day of September, 2014, by the following vote:

AYES: Mayor Marshall, Councilmembers Olsen, Cassidy and Sampson
NAYS: None
ABSENT: Councilmember Hernandez
ABSTAIN: None

Ann H. Marshall

Ann H. Marshall, Mayor

ATTEST:

Denise Radde

Denise Radde, City Clerk

Exhibit A

Initial Damage Assessment Overview

(1)	Pebbly Beach Road – Shoulder & Roadway	$3,800,000.00-$4,800,000.00	COA
(2)	Beach Sand Replenishment	$47,500.00	COA
(3)	Coastline Storm Drain Gates	$24,750.00	COA
(4)	Avalon Green Pier*	$17,000.00	COA
(5)	Harbor Boat	Unknown	COA
(6)	Mooring Buoys Repairs	$6,000.00	COA
(7)	Fuel Dock Floats	$10,000.00	COA
(8)	Fuel Dock Pier*	$5,000.00	COA
(9)	Cabrillo Mole Floats	$5,000.00	COA
(10)	South Beach Swim Float	$5,000.00-$10,000.00	COA
(11)	Dinghy Docks	Unknown	COA
(12)	Cabrillo Mole Infrastructure	Unknown	COA
(13)	Step Beach Ocean Access Steps	Unknown	COA
(14)	Miscellaneous Damages	Unknown	COA
	Initial Estimate Total:	**$4,877,750.00**	
(15)	Walkway between Casino and Descanso	Unknown	SCIco
(16)	Rip-Rap Replacement btwn Edison & Barge	$1,000,000.00-$5,000,000	SCIco
	Initial Estimate Total:	**$5,000,000.00**	
(16)	Tuna Club Structure*	$5,000.00	TC
	Initial Estimate Total:	**$5,000.00**	
(17)	Yacht Club Structure*	$5,000.00	CIYC
	Initial Estimate Total:	**$5,000.00**	
(18)	Whites Pier Replacement	$2,500,000.00	CIC
(19)	Whites Pier Float Replacement	$500,000.00	CIC
(20)	Camp Fox Pier Replacement	$2,500,000.00	CIC
(21)	Camp Fox Building Repair	$150,000.00	CIC
(22)	Camp Fox Debris Removal	$50,000.00	CIC
(23)	Boat in Campsite Debris & Erosion Clean-up	$50,000.00	CIC
(24)	Mooring Repairs	$10,000.00	CIC
	Initial Estimate Total:	**$5,760,000.00**	
	Grand Total Initial Estimate Identified Entities:	**$15,647,750**	

*Note: These costs only reflect the cost of further assessment and do not reflect the cost of actual repairs.

RESOLUTION NO. 15-01

RESOLUTION OF THE CITY COUNCIL OF THE CITY OF AVALON PROCLAIMING EXISTENCE OF A LOCAL EMERGENCY "AVALON COMPLEX 12/30/14"

WHEREAS, Ordinance No. 670 (1979) of the City of Avalon empowers the Director of Emergency Services (City Manager) to request the City Council to proclaim the existence or threatened existence of a local emergency; and

WHEREAS, the City Council has been requested by the Director of Emergency Services of said City to proclaim the existence of a local emergency therein; and

WHEREAS, the City Council does hereby find:

1. That conditions of extreme peril to the safety of persons and property have arisen within the City of Avalon and Santa Catalina Island, caused by the ocean surge, high tides, rain and extreme winds commencing on or about 8:00 p.m. on the 30th day of December, 2014;

2. That the condition and initial assessment of damage to City infrastructure facilities, as outlined in the attached Exhibit A, will exceed the capability of the City to address and correct without the assistance of County, State and Federal government;

3. That the aforesaid conditions of extreme peril warrant and necessitate the proclamation of the existence of a local emergency; and

4. There is need to take certain actions to protect those who must provide emergency services.

NOW, THEREFORE, IT IS HEREBY PROCLAIMED that a local emergency now exists throughout the City of Avalon and Santa Catalina Island; and

IT IS HEREBY FURTHER PROCLAIMED AND ORDERED that during the existence of said local emergency the powers, functions, and duties of the Director of Emergency Services and the emergency organization of this City shall be those prescribed by state law, by ordinances, and resolutions of this City and/or approved by the City Council on January 6, 2015.

IT IS FURTHER PROCLAIMED AND ORDERED that said local emergency shall be deemed to continue to exist until its termination is proclaimed by the City Council of the City of Avalon, State of California.

IT IS FURTHER PROCLAIMED AND ORDERED that the Director of Emergency Services is directed to pursue all available funding and assistance for repairs, emergency services, clean up and other necessary steps to respond to the local emergency as well as coordinate with local, State and Federal authorities to assess the next steps available to take action to protect and preserve the public safety, health and welfare.

IT IS FURTHER PROCLAIMED AND ORDERED that the Director of Emergency Services is directed to take all appropriate actions to undertake and address the repairs and conditions noted in the attached Exhibit A-as well as other conditions that may exist that are currently unknown but which were caused by the ocean surge and high tides.

IT IS FURTHER ORDERED AND PROCLAIMED that a copy of this proclamation be forwarded to the Director of the California Governor's Office of Emergency Services requesting that the Director find it acceptable in accordance with State law; that the Governor of California issue a proclamation declaring an emergency in Los Angeles County specifically for the City of Avalon and Santa Catalina Island; that the Governor waive regulations that may hinder response and recovery efforts; that recovery assistance be made available; and that the State expedite access to State and Federal resources including Small Business Administration and any other appropriate State and Federal disaster relief programs.

PASSED, APPROVED AND ADOPTED at a regular meeting of the City Council of the City of Avalon on this 6th day of January, 2015, by the following vote:

AYES: Mayor Pro-Tem Olsen, Councilmembers Cassidy, Hernandez and Sampson
NAYS: None
ABSENT: Mayor Marshall
ABSTAIN: None

W. F. Olsen, Mayor Pro-Tem

ATTEST:

Denise A. Radde, City Clerk

Exhibit A
City of Avalon
Initial Damage Assessment Overview

DRAFT ASSESSMENT

	Description	Cost Estimate	Owner
(1)	Pebbly Beach Road – Shoulder & Roadway	$3,800,000.00-$4,800,000.00	COA
(2)	Beach Sand Replenishment	$47,500.00	COA
(3)	Coastline Storm Drain Gates	$24,750.00	COA
(4)	Avalon Green Pier*	$17,000.00	COA
(5)	Dive Park Stairs/Railing	$1,000.00	COA
(6)	Mooring Buoys Repairs - approx. 70	$35,000.00	COA
(7)	Fuel Dock Pier*	$5,000.00	COA
(8)	Pebbly Beach Pedestrian Bridge	$2,000.00	COA
(9)	Cabrillo Mole Infrastructure	$750,000.00-$1,100,000.00	COA
(10)	Cabrillo Mole Seaplane ramp rail/foundation	Unknown	COA
(11)	Step Beach Ocean Access Steps/Railing	Unknown	COA
(12)	Miscellaneous Damages	Unknown	COA
Grand Total Initial Estimate Identified Entities:		$6,032,250.00	

*Note: These costs only reflect the cost of further assessment and do not reflect the cost of actual repairs.

CITY OF AVALON CITY COUNCIL

MEETING DATE:	September 1, 2015	**AGENDA ITEM:**	5
ORIGINATING DEP:	Administration, Public Works	**CITY MANAGER:**	BH
PREPARED BY:	Jordan Monroe, Management Aide Dennis Jaich, Public Works		
SUBJECT:	Engineering & Cost Survey Reports – Storm Damage Areas		

RECOMMENDED ACTION(S): Authorize Staff to proceed with solicitation of an Engineering Cost Analysis Study to determine monetary damages suffered as a result of Hurricane Marie & Avalon Complex events.

REPORT SUMMARY: On September 2, 2014 the City of Avalon declared a state of emergency with Resolution 14-25 for Hurricane Marie which occurred on August 26, 2014. On January 6, 2015 the City of Avalon declared a state of emergency with Resolution 15-01 for the Avalon Complex which occurred on December 30, 2014. Both Hurricane Marie, and the Avalon Complex will be referred to as the 'events'. The City received a letter of Director's Concurrence dated June 12, 2015 from the Governor's Office of Emergency Services (OES) to assist the City with its recovery efforts. Under the Director's Concurrence the City is eligible for California Disaster Assistance Act (CDAA) funding for repairs that constitute permanent work.

Staff has been working with OES to process our application for CDAA, including reviewing the required documentation for each of the projects submitted based on damages from the two events.

One of the major projects as a result of the damages from the two events is Pebbly Beach Road. Since the events occurred, Public Works has monitored and conducted patchwork repairs as needed, however it is believed that the extent of the damages is far more significant. Staff roughly estimates the damages from the two events to be $5,800,000. This does not reflect total costs for a complete Pebbly Beach Road project, but just the damages specific to the events. In order to be eligible for CDAA funding a Damage Survey Report is required each damaged area. This includes describing the disaster related damage to the facility/site and the scope of work to be completed. A key component of demonstrating the disaster related damage is providing reports and documentation of the conditions of the site before and after the event.

In order to adequately detail the impact of the events on Pebbly Beach Road it is necessary to complete a Request For Proposal for an engineering survey of the integrity and damages of the road and to estimate cost for repairs, specifically, the extent of damages from the events

and the associated costs. Additionally, in order to assure a non-bias determination, it will be necessary for the City to employ an outside firm to conduct the cost analysis.

CDAA eligible reimbursable costs include engineering and design services, provided the work relates to site damages incurred due to the events. Thus there is a potential for cost recovery of this survey report, however it is not guaranteed. It is also not guaranteed that if we complete this report that the damages, to any extent, will be eligible.

Staff proposes the RFP process to commence immediately to enter a contract for engineering survey services with the timeline outlined below (all dates 2015):

- Advertisement: **September 9**
- Proposals due: **September 23**
- Interviews: **Week of September 28**
- City Council to award contract: **October 6**
- Awardee to commence service: **October 13**

GOAL ALIGNMENT: City Infrastructure, Pebbly Beach Road

FISCAL IMPACTS: To Be Determined.

CONSEQUENCES OF NOT FOLLOWING RECOMMENDED ACTION: The Pebbly Beach Road will most likely not qualify for CDAA funding due to lack of documentation, and the City will not have a engineering assessment of the road to help plan for necessary and desired capital improvements.

FOLLOW UP ACTION: Implement the proposed RFP schedule.

ADVERTISING, NOTICE AND PUBLIC CONTACT: Pursuant to the Brown Act. (If a notice was published in the paper you can list it here.)

ATTACHMENTS:
NA

CITY OF AVALON CITY COUNCIL

MEETING DATE:	September 1, 2015	**AGENDA ITEM:**	6
ORIGINATING DEPT:	Planning	**CITY MANAGER:**	BH
PREPARED BY:	Audra McDonald, Administrative Analyst		
SUBJECT:	Consideration of a revision to allow for a progress payment under the previously approved purchasing agreement with EBus Inc., for the purchase three (3) 22-foot, all electric buses, and of additional revisions requested by Ebus, Inc..		

RECOMMENDED ACTION(S): Authorize the City Manager to execute an amended version of the purchasing agreement with EBus, Inc., to allow for a progress payment for one of the three buses being manufactured for the City's fixed-route transportation system, and to make other changes to the agreement requested by EBus, Inc.

REPORT SUMMARY: At the May 5, 2015, City Council meeting an agreement to purchase three, 22-foot, electric buses from EBus Inc. was approved. The buses will replace the current trolleys that operate the City of Avalon's fixed route transportation service. The version of the agreement considered at the May 5 meeting provided that the buses would be delivered in November, 2015. EBus, Inc. has completed the fabrication of one of the buses and is requesting the original version of the agreement be amended to allow for a progress payment in the amount of $433,285.50 (price includes sales tax) for the completed bus. EBus has agreed to store the completed bus at their facility in Downey until the electric charging stations are constructed in Avalon (at a location to be determined). Additionally, Ebus' insurance provider has provided a certificate of insurance listing the City of Avalon as an additional insured. EBus is also willing to begin the warranty clock on the bus after it is shipped to the island. The purchase of the buses is being paid for through a Los Angeles Transportation Authority Grant and progress payments are eligible for reimbursement. EBus has also requested certain additional changes to the warranty and payment provisions included in the original version of the agreement, which EBus states are not consistent with what had been negotiated with the City. The changes to the warranty clarify that EBus will repair a bus to address defects and/or replace defective parts during the warranty term, but will not replace a bus. The change to the payment provision requires the City to make payment for the remaining two (2) buses upon acceptance of the buses, and prior to shipment, rather than sixty (60) days following acceptance and delivery of the buses. City staff believes that these additional changes are commercially reasonable. Execution copies of the original version of the agreement considered by the City were provided to EBus for signature, however, the agreement was never executed by EBus.

Therefore, the modifications are reflected in an amended version of the agreement which will be fully executed, if approved, prior to release of any payment to Ebus.

GOAL ALIGNMENT: Comprehensive Transportation Review

FISCAL IMPACTS: The progress payment in the amount of $433,285.50 (price includes sales tax) would be immediately billed to LACMTA for the allowed 80% reimbursement against the grant. The 20% balance would be billed against the City's Transportation, Proposition A Reserve Balance.

CONSEQUENCES OF NOT FOLLOWING RECOMMENDED ACTION: No progress payment would be made.

FOLLOW UP ACTION: If approved, authorize the City Manager to execute the amended purchasing agreement.

ADVERTISING, NOTICE AND PUBLIC CONTACT: Pursuant to the Brown Act.

ATTACHMENTS:

1. Amended Purchasing Contract and Exhibits
2. May 5, 2015 Staff Report
3. Ebus Inc. progress payment invoice

EBUS, INC.

9250 Washburn Road,
Downey, CA 90242
Phone (562) 904-3474 Fax (562)904-3468
sales@ebus.com

QUOTATION

DATE: JULY 29,2015 (REV)
ORIGINAL DATE: JULY 11, 2014

TO **City of Avalon**
Avalon, CA 90704

SHIP TO **City of Avalon**
Avalon, CA 90704

SALESPERSON	JOB	SHIPPING METHOD	SHIPPING TERMS	DELIVERY DATE	PAYMENT TERMS	DUE DATE
Ebus		Ocean Barge	FOB Downey, CA	Four (4) months after contract execution	Payment in full upon acceptance of buses at Ebus factory, prior to shipment.	Four (4) months after contract execution

QTY	ITEM #	DESCRIPTION	UNIT PRICE	DISCOUNT	LINE TOTAL
Three (3)	1	Ebus22 Electric Buses per attached Specifications Additional equipment included: Ebus shall replace standard bus windows with special slider windows for extra air flow Buses to be equipped with back-up cameras and driver displays Buses to be equipped with bike racks Two (2) Bus Chargers Warranty of one (1) year on complete buses Ebus to provide executed copies of all FTA required documents	$396,600		$1,189,800
		Sales Tax @ 9.25%			$110,056
			TOTAL AMOUNT INCL SALES TAX		$1,299,856

CITY OF AVALON
PURCHASE AGREEMENT
WITH EBUS, INC

This Equipment Purchase Agreement ("Agreement") is entered into this ____ day of _____, 2015, by and between the City of Avalon, a California municipal corporation operating under the laws of the State of California with its principal place of business at 410 Avalon Canyon Road, Avalon, CA 90704 ("City"), and EBUS, Inc ("Contractor"). City and Contractor are sometimes individually referred to as "Party" and collectively as "Parties" in this Agreement.

Section 1. DEFINITIONS.

A. "Equipment" means all machinery, equipment, items, parts, materials, labor or other services, including design, engineering and installation services, provided by Contractor as specified in Exhibit "A," attached hereto and incorporated herein by reference.

B. "Delivery Date(s)" means that date or dates upon which the Equipment is to be delivered to City, ready for approval, testing and/or use as specified in Exhibit "B."

Section 2. MATERIALS AND WORKMANSHIP.

When Exhibit "A" specifies machinery, equipment or material by manufacturer, model or trade name, no substitution will be made without City's written approval. Machinery, equipment or material installed in the Equipment without the approval required by this Section 2 will be deemed to be defective material for purposes of Section 4. Where machinery, equipment or materials are referred to in Exhibit "A" as equal to any particular standard, City will decide the question of equality. When requested by City, Contractor will furnish City with the name of the manufacturer, the performance capabilities and other pertinent information necessary to properly determine the quality and suitability of any machines, equipment and material to be incorporated in the Equipment. Material samples will be submitted at City's request.

Section 3. INSPECTIONS AND TESTS.

City shall have the right to inspect and/or test the Equipment prior to acceptance. If upon inspection or testing the Equipment or any portion thereof are found to be nonconforming, unsatisfactory, defective, of inferior quality or workmanship, or fail to meet any requirements or specifications contained in Exhibit "A," then without prejudice to any other rights or remedies, City may reject the Equipment or exercise any of its rights under Section 4.C. The inspection, failure to make inspection, acceptance of goods, or payment for goods shall not impair City's right to reject nonconforming goods, irrespective of City's failure to notify Contractor of a rejection of nonconforming goods or revocation of acceptance thereof or to specify with particularity any defect in nonconforming goods after rejection or acceptance thereof.

Section 4. WARRANTY.

A. Contractor warrants that the Equipment will be of merchantable quality and free from defects in design, engineering, material and workmanship for a period of two (2) years, or such longer period as provided by a manufacturer's warranty or as agreed to by Contractor and City, from the date of final written acceptance of the Equipment by City as required for final payment under Section 7. Contractor further warrants that any services provided in connection with the Equipment will be performed in a professional and workmanlike manner and in accordance with the highest industry standards.

B. Contractor further warrants that all machinery, equipment or process included in the Equipment will meet the performance requirements and specifications specified in Exhibit "A" and shall be fit for the purpose intended. City's inspection, testing, approval or acceptance of any such machinery, equipment or process will not relieve Contractor of its obligations under this Section 4.B.

C. For any breach of the warranties contained in Section 4.A and Section 4.B, Contractor will, immediately after receiving notice from City, at the option of City, and at Contractor's own expense and without cost to City:

1. Repair the defective Equipment;

2. Replace the defective portion(s) of the Equipment so that the Equipment conforms to the requirements of this Agreement.

Defects will be remedied without cost to City, including but not limited to, the costs of removal, repair and replacement of the defective portion(s) of the Equipment, and reinstallation of new portion(s) of the Equipment. All such defective Equipment that is so remedied will be similarly warranted as stated above. In addition, Contractor will repair or replace other items of the Equipment which may have been damaged by such defects or the repairing of the same, all at its own expense and without cost to City. The remedied Equipment shall be returned F.O.B. to City's office or other location of City to where the Equipment was originally delivered.

D. Contractor also warrants that the Equipment is free and clear of all liens and encumbrances whatsoever, that Contractor has a good and marketable title to same, and that Contractor owns or has a valid license for all of the proprietary technology and intellectual property incorporated within the Equipment. Contractor agrees to indemnify, defend and hold City harmless against any and all third party claims resulting from the breach or inaccuracy of any of the foregoing warranties.

E. In the event of a breach by Contractor of its obligations under this Section 4, City will not be limited to the remedies set forth in this Section 4, but will have all the

rights and remedies permitted by applicable law, including without limitation, all of the rights and remedies afforded to City under the California Commercial Code.

Section 5. PRICES.

Unless expressly provided otherwise, all prices and fees specified in Exhibit "C," attached hereto and incorporated herein by reference, are firm and shall not be subject to change without the written approval of City. No extra charges of any kind will be allowed unless specifically agreed to in writing by City's authorized representative. The total price shall include (i) all federal, state and local sales, use, excise, privilege, payroll, occupational and other taxes applicable to the Equipment furnished to City hereunder; and (ii) all charges for packing, freight and transportation to destination.

Section 6. CHANGES.

City, at any time, by a written order, and without notice to any surety, may make changes in the Equipment, including but not limited to, City's requirements and specifications. If such changes affect the cost of the Equipment or time required for its performance, an equitable adjustment will be made in the price or time for performance or both. Any change in the price necessitated by such change will be agreed upon between City and Contractor and such change will be authorized by a change order document signed by City and accepted by Contractor.

Section 7. PAYMENTS.

A. Final payment shall be made upon acceptance of the Equipment at Contractor's factory, and prior to shipment of the Equipment to the City.Payment of invoices shall not constitute acceptance of Equipment.

B. If Progress Milestones have been specified Exhibit "B," then payments for the Equipment will be made as the requirements of such Progress Milestones are met. Progress payments for the Equipment will be made by City upon proper application by Contractor during the progress of the Equipment and according to the terms of payment as specified in Exhibit "B." Contractor's progress billing invoice will include progress payments due for the original scope of work and changes. Each "Item for Payment" shown in Exhibit "B" and each change order will be itemized on the invoice. Invoices for cost plus work, whether part of Exhibit "B" or a change order, must have subcontractor and/or supplier invoices attached to Contractor's invoice. Other format and support documents for invoices will be determined by City in advance of the first invoice cycle.

C. Payments otherwise due may be withheld by City on account of defective Equipment not remedied, liens or other claims filed, reasonable evidence indicating probable filing of liens or other claims, failure of Contractor to make payments properly to its subcontractors or for material or labor, the failure of Contractor to perform any of its other obligations under the Agreement, or to

protect City against any liability arising out of Contractor's failure to pay or discharge taxes or other obligations. If the causes for which payment is withheld are removed, the withheld payments will be made promptly. If the said causes are not removed within a reasonable period after written notice, City may remove them at Contractor's expense.

D. Payment of the final Progress Milestone payment or any retention will be made by City upon:

1. Submission of an invoice for satisfactory completion of the requirements of a Progress Milestone as defined in Exhibit "B" and in the amount associated with the Progress Milestone;

2. Written acceptance of the Equipment by City;

3. Delivery of all drawings and specifications, if required by City;

4. Delivery of executed full releases of any and all liens arising out of this Agreement; and

5. Delivery of an affidavit listing all persons who might otherwise be entitled to file, claim or maintain a lien of any kind or character, and containing an averment that all of the said persons have been paid in full.

If any person refuses to furnish an actual release or receipt in full, Contractor may furnish a bond satisfactory to City to indemnify City against any claim or lien at no cost to City.

E. Acceptance by Contractor of payment of the final Progress Milestone payment pursuant to Section 7.D will constitute a waiver, release and discharge of any and all claims and demands of any kind or character which Contractor then has, or can subsequently acquire against City, its successors and assigns, for or on account of any matter or thing arising out of, or in any manner connected with, the performance of this Agreement. However, payment for the final Progress Milestone by City will not constitute a waiver, release or discharge of any claims or demands which City then has, or can subsequently acquire, against Contractor, its successors and assigns, for or on account of any matter or thing arising out of, or in any manner connected with, the performance of this Agreement.

Section 8. <u>SCHEDULE FOR DELIVERY</u>.

A. The time of Contractor's performance is of the essence for this Agreement. The Equipment will be delivered in accordance with the schedule set forth in Exhibit "B." Contractor must immediately notify City in writing any time delivery is behind schedule or may not be completed on schedule.

B. In the event that the Equipment is part of a larger project or projects that require the coordination of multiple contractors or suppliers, then Contractor will fully cooperate in scheduling the delivery so that City can maximize the efficient completion of such project(s).

Section 9. TAXES.

A. Contractor agrees to timely pay all sales and use tax (including any value added or gross receipts tax imposed similar to a sales and use tax) imposed by any federal, state or local taxing authority on the ultimate purchase price of the Equipment provided under this Agreement.

B. Contractor will withhold, and require its subcontractors, where applicable, to withhold all required taxes and contributions of any federal, state or local taxing authority which is measured by wages, salaries or other remuneration of its employees or the employees of its subcontractors. Contractor will deposit, or cause to be deposited, in a timely manner with the appropriate taxing authorities all amounts required to be withheld.

C. All other taxes, however denominated or measured, imposed upon the price of the Equipment provided hereunder, will be the responsibility of Contractor. In addition, all taxes assessed by any taxing jurisdiction based on Contractor property used or consumed in the provision of the Equipment such as and including ad valorem, use, personal property and inventory taxes will be the responsibility of Contractor.

D. Contractor will, upon written request, submit to City written evidence of any filings or payments of all taxes required to be paid by Contractor hereunder.

Section 10. INDEPENDENT CONTRACTOR.

Contractor enters into this Agreement as an independent contractor and not as an employee of City. Contractor shall have no power or authority by this Agreement to bind City in any respect. Nothing in this Agreement shall be construed to be inconsistent with this relationship or status. All employees, agents, contractors or subcontractors hired or retained by the Contractor are employees, agents, contractors or subcontractors of the Contractor and not of City. City shall not be obligated in any way to pay any wage claims or other claims made against Contractor by any such employees, agents, contractors or subcontractors or any other person resulting from performance of this Agreement.

Section 11. SUBCONTRACTS.

Unless otherwise specified, Contractor must obtain City's written permission before subcontracting any portion of the Equipment. Except for the insurance requirements in Section 13.A, all subcontracts and orders for the purchase or rental of supplies, materials or equipment, or any other part of the Equipment, will require that the

subcontractor be bound by and subject to all of the terms and conditions of the Agreement. No subcontract or order will relieve Contractor from its obligations to City, including, but not limited to Contractor's insurance and indemnification obligations. No subcontract or order will bind City.

Section 12. TITLE AND RISK OF LOSS.

Unless otherwise agreed, City will have title to, and risk of loss of, all completed and partially completed portions of the Equipment upon delivery, as well as materials delivered to and stored on City property which are intended to become a part of the Equipment. However, Contractor will be liable for any loss or damage to the Equipment and/or the materials caused by Contractor or its subcontractors, their agents or employees, and Contractor will replace or repair said Equipment or materials at its own cost to the complete satisfaction of City. Notwithstanding the foregoing, in the event that the City has paid Contractor for all or a portion of the Equipment which remains in the possession of Contractor, then City shall have title to, and the right to take possession of, such Equipment at any time following payment therefor. Risk of loss for any Equipment which remains in the possession of Contractor shall remain with Contractor until such Equipment has been delivered or City has taken possession thereof. Contractor will have risk of loss or damage to Contractor's property used in the construction of the Equipment but which does not become a part of the Equipment.

Section 13. INDEMNIFICATION.

A. Contractor shall defend, indemnify and hold the City, its elected officials, officers, employees, volunteers and agents free and harmless from any and all claims, demands, causes of action, costs, expenses, liability, loss, damage or injury, in law or equity, to property or persons, including wrongful death, in any manner arising out of or incident to any alleged acts, omissions, negligence or willful misconduct of Contractor, its officials, officers, employees, agents, subcontractors and subconsultants arising out of or in connection with the Equipment or the performance of this Agreement, including without limitation the payment of all consequential damages and attorneys' fees and other related costs and expenses except such loss or damage which was caused by the sole negligence or willful misconduct of the City.

B. Contractor's defense obligation for any and all such aforesaid suits, actions or other legal proceedings of every kind that may be brought or instituted against the City, its directors, officials, officers, employees, agents or volunteers shall be at Contractor's own cost, expense and risk. Contractor shall pay and satisfy any judgment, award or decree that may be rendered against City or its elected officials, officers, employees, agents or volunteers, in any such suit, action or other legal proceeding. Contractor shall reimburse City and its elected officials, officers, employees, agents and/or volunteers, for any and all legal expenses and costs incurred by each of them in connection therewith or in enforcing the indemnity herein provided.

C. Contractor's obligation to indemnify shall not be restricted to insurance proceeds, if any, received by the City, its elected officials, officers, employees, agents or volunteers.

Section 14. INSURANCE.

A. General. Contractor shall take out and maintain:

1. Commercial General Liability Insurance, of at least $1,000,000 per occurrence/ $2,000,000 aggregate for bodily injury, personal injury and property damage, at least as broad as Insurance Services Office Commercial General Liability most recent Occurrence Form CG 00 01;

2. Automobile Liability Insurance for bodily injury and property damage including coverage for owned, non-owned and hired vehicles, of at least $1,000,000 per accident for bodily injury and property damage, at least as broad as most recent Insurance Services Office Form Number CA 00 01 covering automobile liability, Code 1 (any auto);

3. Workers' Compensation in compliance with applicable statutory requirements and Employer's Liability Coverage of at least $1,000,000 per occurrence; and

4. Pollution Liability Insurance of at least $1,000,000 per occurrence and $2,000,000 aggregate shall be provided by the Contractor if transporting hazardous materials.

5. If Contractor is also the manufacturer of any equipment included in the Equipment, Contractor shall carry Product Liability and/or Errors and Omissions Insurance which covers said equipment with limits of not less than $1,000,000.

B. Additional Insured; Primary; Waiver of Subrogation; No Limitation on Coverage. The policies required under this Section shall give City, its elected officials, officers, employees, agents or volunteers additional insured status. Such policies shall contain a provision stating that Contractor's policy is primary insurance and that any insurance, self-insurance or other coverage maintained by the City or any additional insureds shall not be called upon to contribute to any loss, and shall contain or be endorsed with a waiver of subrogation in favor of the City, its officials, officers, employees, agents, and volunteers. The limits set forth herein shall apply separately to each insured against whom claims are made or suits are brought, except with respect to the limits of liability. Requirements of specific coverage or limits contained in this section are not intended as a limitation on coverage, limits, or other requirement, or a waiver of any coverage normally provided by any insurance. Any available coverage shall

be provided to the parties required to be named as additional insured pursuant to this Agreement.

C. Insurance Carrier. All insurance required under this Section is to be placed with insurers with a current A.M. Best's rating no less than A:VIII, licensed to do business in California, and satisfactory to the City.

D. Evidence of Insurance. Contractor shall furnish City with original certificates of insurance and endorsements effecting coverage required by the Agreement. The certificates and endorsements for each insurance policy shall be signed by a person authorized by that insurer to bind coverage on its behalf, and shall be on forms supplied or approved by the City. All certificates and endorsements must be received and approved by the City before delivery commences. The City reserves the right to require complete, certified copies of all required insurance policies, at any time.

E. Subcontractors. All subcontractors shall meet the requirements of this Section before commencing work. In addition, Contractor shall include all subcontractors as insureds under its policies or shall furnish separate certificates and endorsements for each subcontractor. All coverages for subcontractors shall be subject to all of the requirements stated herein.

F. Freight. Contractor shall ensure that third party shippers contracted by Contractor have adequate insurance coverage for the shipped Equipment.

Section 15. LIENS.

A. Contractor, subcontractors and suppliers will not make, file or maintain a mechanic's or other lien or claim of any kind or character against the Equipment, for or on account of any labor, materials, fixtures, tools, machinery, equipment, or any other things furnished, or any other work done or performance given under, arising out of, or in any manner connected with the Agreement (such liens or claims referred to as "Claims"); and Contractor, subcontractor and suppliers expressly waive and relinquish any and all rights which they now have, or may subsequently acquire, to file or maintain any Claim and Contractor, subcontractor and suppliers agree that this provision waiving the right of Claims will be an independent covenant.

B. Contractor will save and hold City harmless from and against any and all Claims that may be filed by a subcontractor, supplier or any other person or entity and Contractor will, at its own expense, defend any and all actions based upon such Claims and will pay all charges of attorneys and all costs and other expenses arising from such Claims.

Section 16. TERMINATION OF AGREEMENT BY CITY.

A. Should Contractor at any time refuse or fail to deliver the Equipment with promptness and diligence, or to perform any of its other obligations under the

Agreement, City may terminate Contractor's right to proceed with the delivery of the Equipment by written notice to Contractor. In such event City may obtain the Equipment by whatever method it may deem expedient, including the hiring of another contractor or other contractors and, for that purpose, may take possession of all materials, machinery, equipment, tools and appliances and exercise all rights, options and privileges of Contractor. In such case Contractor will not be entitled to receive any further payments until the Equipment is delivered. If City's cost of obtaining the Equipment, including compensation for additional managerial and administrative services, will exceed the unpaid balance of the Agreement, Contractor will be liable for and will pay the difference to City.

B. City may, for its own convenience, terminate Contractor's right to proceed with the delivery of any portion or all of the Equipment by written notice to Contractor. Such termination will be effective in the manner specified in such notice, will be without prejudice to any claims which City may have against Contractor, and will not affect the obligations and duties of Contractor under the Agreement with respect to portions of the Equipment not terminated.

C. On receipt of notice under Section 16.B, Contractor will, with respect to the portion of the Equipment terminated, unless the notice states otherwise,

1. Immediately discontinue such portion of the Equipment and the placing of orders for materials, facilities, and supplies in connection with the Equipment,

2. Unless otherwise directed by City, make every reasonable effort to procure cancellation of all existing orders or contracts upon terms satisfactory to City; and

3. Deliver only such portions of the Equipment which City deems necessary to preserve and protect those portions of the Equipment already in progress and to protect material, plant and equipment at the Equipment site or in transit to the Equipment site.

D. Upon termination pursuant to Section 16.B, Contractor will be paid a pro rata portion of the compensation in the Agreement for any portion of the terminated Equipment already delivered, including material and services for which it has made firm contracts which are not canceled, it being understood that City will be entitled to such material and services. Upon determination of the amount of said pro rata compensation, City will promptly pay such amount to Contractor upon delivery by Contractor of the releases of liens and affidavit, pursuant to Section 7.C.

Section 17. MISCELLANEOUS PROVISIONS.

A. Delivery of Notices. All notices permitted or required under this Agreement shall be given to the respective parties at the following address or at such other address as the respective parties may provide in writing for this purpose:

CITY:	**CONTRACTOR:**
City of Avalon	EBus
Audra McDonald	Andy Eklov
Post Office Box 707	9520 Washburn Road
Avalon, CA 90704	Downey, CA 90242

Such notice shall be deemed made when personally delivered or when mailed, forty-eight (48) hours after deposit in the U.S. Mail, first class postage prepaid and addressed to the party at its applicable address. Actual notice shall be deemed adequate notice on the date actual notice occurred, regardless of the method of service.

B. Assignment or Transfer. Contractor shall not assign or transfer any interest in this Agreement whether by assignment or novation, without the prior written consent of the City, which will not be unreasonably withheld. Provided, however, that claims for money due or to become due Contractor from the City under this Agreement may be assigned to a financial institution or to a trustee in bankruptcy, without such approval. Notice of any assignment or transfer, whether voluntary or involuntary, shall be furnished promptly to the City.

C. Successors and Assigns. This Agreement shall be binding on the successors and assigns of the Parties.

D. Amendment; Modification. No supplement, modification or amendment of this Agreement shall be binding unless executed in writing and signed by both Parties.

E. Waiver. No waiver of any default shall constitute a waiver of any other default or breach, whether of the same or other covenant or condition. No waiver, benefit, privilege or service voluntarily given or performed by a Party shall give the other Party any contractual rights by custom, estoppel or otherwise.

F. Governing Law. This Agreement shall be governed by the laws of the State of California. Venue shall be in Los Angeles County.

G. Interpretation. Since the Parties or their agents have participated fully in the preparation of this Agreement, the language of this Agreement shall be

construed simply, according to its fair meaning, and not strictly for or against any Party.

H. No Third Party Beneficiaries. There are no intended third party beneficiaries of any right or obligation assumed by the Parties.

I. Authority to Enter Agreement. Each Party warrants that the individuals who have signed this Agreement have the legal power, right and authority to make this Agreement and bind each respective Party.

J. Invalidity; Severability. If any portion of this Agreement is declared invalid, illegal or otherwise unenforceable by a court of competent jurisdiction, the remaining provisions shall continue in full force and effect.

K. Counterparts. This Agreement may be signed in counterparts, each of which shall constitute an original.

L. City's Right to Employ Other Contractors.

City reserves its right to employ other contractors in connection with the Equipment.

M. Entire Agreement. This Agreement constitutes the entire agreement between the Parties relative to the Equipment specified herein. There are no understandings, agreements, conditions, representations, warranties or promises with respect to this Agreement, except those contained in or referred to in the writing.

N. Funding Requirements. This Agreement may be subject to additional requirements related to the funding sources used by the City to pay for the Equipment. Any such funding requirements shall be attached hereto as Exhibit "D" and incorporated herein by reference. If funding requirements are included in Exhibit "D", Contractor shall comply with all such requirements.

O. Conflicting Provisions. In the event of any conflict between the terms of this Agreement and any exhibit or attachment hereto, the terms of this Agreement shall govern.

SIGNATURE PAGE FOR PURCHASE AGREEMENT
BETWEEN THE CITY OF AVALON
AND EBUS, INC.

IN WITNESS WHEREOF, the Parties hereto have executed this Agreement as of the day and year first above written.

EBUS, INC. By:_____ Name and Title: _____ *Attest:* By: _____ Its: Secretary	**CITY OF AVALON** By:_____ Name and Title: _____ *Attest:*_____ City Secretary *Approved as to form:* Best Best & Krieger LLP _____ City Attorney

EXHIBIT "A"
EQUIPMENT SPECIFICATIONS

Notwithstanding anything to the contrary in the attached specifications, the specifications attached hereto are not subject to change following the date this Agreement is executed without a written amendment to this Agreement approved by both Parties.

All items identified in the attached specifications as "optional" shall be included at no additional cost.

The specifications for the bus chargers are attached behind the specifications for the buses.

Specifications Attached

EXHIBIT "B"
PROGRESS PAYMENT & DELIVERY SCHEDULE

Progress Payment.

A single progress payment may be provided under this Agreement as follows:

Upon receipt of an invoice therefor, the City may pay for one (1) bus following inspection and acceptance thereof at the Ebus factory. Payment shall be made within fifteen (15) days of the City's receipt of the invoice, and full execution of this Agreement. Notwithstanding such payment, Contractor shall store the bus at the Ebus factory, at no additional cost to the City, and shall extend the warranty on said bus until all Equipment is delivered to City pursuant to the terms of this Agreement. The City shall have the right to make a second inspection of the accepted bus prior to delivery of all Equipment to the City. The risk of loss and all other provisions of this Agreement shall apply to the bus stored by Contractor.

Delivery.

Delivery to Catalina Freight Line in Wilmington, CA of all Equipment required hereunder within six months of the date of the execution of the contract contingent upon the installation of a fully operational charging system located in Avalon, CA. Should delays exist in the construction of the charging system, the City reserves the right to extend delivery by an additional two months.

Such extension shall be at no additional cost to the City, and, as set forth in the Agreement, the warranty period shall not commence until delivery of all Equipment.

EXHIBIT "C" – FEE SCHEDULE

Attached

Exhibit "D" – Funding Requirements

Metro Funding Agreement Attached

CITY OF AVALON CITY COUNCIL

MEETING DATE: May 5, 2015

AGENDA ITEM: 10

CITY MANAGER: BH

ORIGINATING DEP: Planning

PREPARED BY: Audra McDonald, Administrative Analyst

SUBJECT: Consideration of a purchasing agreement with EBus Inc., to purchase three (3) 22-foot, all electric buses to be used for the City of Avalon's fixed-route bus service currently being serviced by 30-foot trolley type buses.

RECOMMENDED ACTION(S): Authorize the City Manager to enter into a purchasing agreement with EBus, Inc., in an amount not-to-exceed $1,189,000 excluding sales tax for the purchase of three (3) 22-foot, all electric buses per the quote dated July 11, 2014.

REPORT SUMMARY: The City of Avalon contracts the operation of a fixed-route bus service, known as Avalon Community Transit, to Catalina Transportation Services. This program is operated utilizing three City owned, 30-foot; gasoline powered Molley Trolleys. Prior City Councils directed staff to identify and apply for funding opportunities that would replace the aging Trolleys, with smaller, more accessible and less polluting buses. Through the Los Angeles County Metropolitan Transportation Authority's (LACMTA) 2012 Call for Projects process the City was awarded a grant to purchase new buses. The grant application specified the new buses would be all electric and 22 feet in length in order to be more compatible with the City's narrower streets.

In March, 2014, the City Council approved the sole source findings to dispense with public bidding and authorize direct negotiations with EBus, Inc. Those direct negotiations resulted in a competitive price of $396,600 ($10,200 cost savings) per bus and includes two charging systems normally priced at $42,000 each ($84,000 savings). Additionally, as a result of a visit to the EBus plant by Mayor Marshall and Council Member Sampson in May 2014, bike racks and back-up camera's are also included in the price.

A separate agenda item tonight requests the issuance of a contract to perform a comprehensive review of the City's contracted transportation services and perform a public procurement process. During that review, the details of the operation and maintenance of the new buses will be addressed and be included in the new contract. The current contract calls for the operator to provide all maintenance and fuel for the trolleys. It is the intent of the City to take over the maintenance and fueling (electricity) of the new buses as this is a significant capital investment the City would like to protect. EBus has offered to provide training to the City's staff mechanics for the routine maintenance of the new buses.

The purchasing agreement calls for delivery of the buses six months after the execution of the contract which would put the delivery of the buses around November, 2015. The purchasing contract also has a clause stating the City may delay the receipt of the buses an additional two months to ensure charging capabilities have been accomplished prior to delivery. Staff is working on the delivery of the electricity necessary to charge the buses.

GOAL ALIGNMENT: Comprehensive Transportation Review

FISCAL IMPACTS:

Item	Amount	Grant Funding-LACMTA CFP **$1,020,780**	City Transportation Account Prop A Reserve Balance **$369,431**
Buses (including chargers, bike racks, back up cameras	$1,189,800	$1,020,780	$169,020
Sales Tax	$116,006		$116,006
Charging Infrastructure	$50,000		$50,000
Bus "Wrap"	$30,000		$30,000
Water Freight	$6,500		$6,500
Total	**$1,392,306**	**$1,020,780**	**$371,526**

Available funding for the project which represents a combination of CFP and Prop A Reserve balances is $1,390,211. A balance of $2,095 would need to be allocated from the General Fund to bridge the deficit.

CONSEQUENCES OF NOT FOLLOWING RECOMMENDED ACTION: No new buses will be purchased and funding may be jeopardized.

FOLLOW UP ACTION: Execute the purchasing agreement in the attached form; subject to changes approved by the City Manager and the City Attorney; continue with the installation of the charging station infrastructure; and research "wrap" options to bring back at a future City Council Meeting for direction.

ADVERTISING, NOTICE AND PUBLIC CONTACT: Pursuant to the Brown Act.

ATTACHMENTS:

1. Purchasing Contract and Exhibits
2. Sole Source Findings Staff Report

EBUS, INC.

9250 Washburn Road,
Downey, CA 90242
Phone (562) 904-3474 Fax (562)904-3468
sales@ebus.com

INVOICE

INVOICE NO. 073015-1
JULY 30, 2015

TO **City of Avalon**
Avalon, CA 90704

SHIP TO **City of Avalon**
Avalon, CA 90704

SALESPERSON	JOB	SHIPPING METHOD	SHIPPING TERMS	DELIVERY DATE	PAYMENT TERMS	DUE DATE
Ebus		Ocean Barge	FOB Downey, CA	Upon completion of electric power installation	Payment in full upon acceptance of buses at Ebus factory, prior to shipment.	Now

QTY	ITEM #	DESCRIPTION	UNIT PRICE	DISCOUNT	LINE TOTAL
1		Ebus22 Electric Bus per City of Avalon Purchase Agreement. VIN Number 1E9BS1128EC248138	$396,600		$396,600
		Bus equipped with special slider windows for extra air flow			
		Bus equipped with back-up camera and driver display			
		Bus equipped with bike rack			
		Warranty of two (2) years on complete bus			
		Ebus will provide indoor storage for bus in its factory			
		Warranty to commence upon shipment of bus to Avalon			
		Sales Tax @ 9.25%			$36,685.50
			TOTAL AMOUNT INCL SALES TAX		$433,285.50

ACORD®

CERTIFICATE OF LIABILITY INSURANCE

1/1/2016

DATE (MM/DD/YYYY): 8/20/2015

THIS CERTIFICATE IS ISSUED AS A MATTER OF INFORMATION ONLY AND CONFERS NO RIGHTS UPON THE CERTIFICATE HOLDER. THIS CERTIFICATE DOES NOT AFFIRMATIVELY OR NEGATIVELY AMEND, EXTEND OR ALTER THE COVERAGE AFFORDED BY THE POLICIES BELOW. THIS CERTIFICATE OF INSURANCE DOES NOT CONSTITUTE A CONTRACT BETWEEN THE ISSUING INSURER(S), AUTHORIZED REPRESENTATIVE OR PRODUCER, AND THE CERTIFICATE HOLDER.

IMPORTANT: If the certificate holder is an ADDITIONAL INSURED, the policy(ies) must be endorsed. If SUBROGATION IS WAIVED, subject to the terms and conditions of the policy, certain policies may require an endorsement. A statement on this certificate does not confer rights to the certificate holder in lieu of such endorsement(s).

PRODUCER
Lockton Insurance Brokers, LLC
725 S. Figueroa Street, 35th Fl.
CA License #0F15767
Los Angeles CA 90017
(213) 689-0065

CONTACT NAME:
PHONE (A/C, No, Ext):
FAX (A/C, No):
E-MAIL ADDRESS:

INSURER(S) AFFORDING COVERAGE	NAIC #
INSURER A : Travelers Property Casualty Co of America	25674
INSURER B : Admiral Insurance Company	24856
INSURER C :	
INSURER D :	
INSURER E :	
INSURER F :	

INSURED
1327991
EBUS, Inc.
9250 Washburn Road
Downey CA 90242

COVERAGES EBUIN01 **CERTIFICATE NUMBER:** 13631695 **REVISION NUMBER:** XXXXXXX

THIS IS TO CERTIFY THAT THE POLICIES OF INSURANCE LISTED BELOW HAVE BEEN ISSUED TO THE INSURED NAMED ABOVE FOR THE POLICY PERIOD INDICATED. NOTWITHSTANDING ANY REQUIREMENT, TERM OR CONDITION OF ANY CONTRACT OR OTHER DOCUMENT WITH RESPECT TO WHICH THIS CERTIFICATE MAY BE ISSUED OR MAY PERTAIN, THE INSURANCE AFFORDED BY THE POLICIES DESCRIBED HEREIN IS SUBJECT TO ALL THE TERMS, EXCLUSIONS AND CONDITIONS OF SUCH POLICIES. LIMITS SHOWN MAY HAVE BEEN REDUCED BY PAID CLAIMS.

INSR LTR	TYPE OF INSURANCE	ADDL INSD	SUBR WVD	POLICY NUMBER	POLICY EFF (MM/DD/YYYY)	POLICY EXP (MM/DD/YYYY)	LIMITS	
A	X COMMERCIAL GENERAL LIABILITY CLAIMS-MADE X OCCUR GEN'L AGGREGATE LIMIT APPLIES PER: POLICY PRO-JECT LOC OTHER:	Y	N	Y6304094B26414	1/1/2015	1/1/2016	EACH OCCURRENCE DAMAGE TO RENTED PREMISES (Ea occurrence) MED EXP (Any one person) PERSONAL & ADV INJURY GENERAL AGGREGATE PRODUCTS - COMP/OP AGG $	$ 1,000,000 $ 100,000 $ 5,000 $ 1,000,000 $ 2,000,000 $ See Below
A	AUTOMOBILE LIABILITY X ANY AUTO ALL OWNED AUTOS SCHEDULED AUTOS HIRED AUTOS NON-OWNED AUTOS	N	N	Y8106389B33814	1/1/2015	1/1/2016	COMBINED SINGLE LIMIT (Ea accident) BODILY INJURY (Per person) BODILY INJURY (Per accident) PROPERTY DAMAGE (Per accident) Medical	$ 1,000,000 $ XXXXXXX $ XXXXXXX $ XXXXXXX $ 5,000
B	UMBRELLA LIAB X OCCUR X EXCESS LIAB CLAIMS-MADE DED RETENTION $	N	N	EX00001325903	1/1/2015	1/1/2016	EACH OCCURRENCE AGGREGATE $	$ 5,000,000 $ 5,000,000 $ XXXXXXX
A	WORKERS COMPENSATION AND EMPLOYERS' LIABILITY ANY PROPRIETOR/PARTNER/EXECUTIVE OFFICER/MEMBER EXCLUDED? (Mandatory in NH) Y/N N If yes, describe under DESCRIPTION OF OPERATIONS below	N/A	N	UB4993B38614	1/1/2015	1/1/2016	X PER STATUTE OTH-ER E.L. EACH ACCIDENT E.L. DISEASE - EA EMPLOYEE E.L. DISEASE - POLICY LIMIT	$ 1,000,000 $ 1,000,000 $ 1,000,000
B	Product Completed / Aggregate	N	N	CA00001542605	1/1/2015	1/1/2016	$1,000,000 Per Occurrence $2,000,000 Prod/Ops Agg $5,000 Ded.	

DESCRIPTION OF OPERATIONS / LOCATIONS / VEHICLES (ACORD 101, Additional Remarks Schedule, may be attached if more space is required)
Re: City of Avalon is an Additional Insured(s) as per the attached endorsement or policy language.

CERTIFICATE HOLDER

13631695
City of Avalon
410 Avalon Canyon Rd.
P.O. Box 707
Avalon CA 90704

CANCELLATION See Attachment

SHOULD ANY OF THE ABOVE DESCRIBED POLICIES BE CANCELLED BEFORE THE EXPIRATION DATE THEREOF, NOTICE WILL BE DELIVERED IN ACCORDANCE WITH THE POLICY PROVISIONS.

AUTHORIZED REPRESENTATIVE

© 1988-2014 ACORD CORPORATION. All rights reserved.

The ACORD name and logo are registered marks of ACORD

CITY OF AVALON CITY COUNCIL

MEETING DATE: September 1, 2015 **AGENDA ITEM:** 7

ORIGINATING DEP: Planning Department **CITY MANAGER:** BH

PREPARED BY: Planning

SUBJECT: Resolution Upholding Planning Commission Decision on Appeal

---

RECOMMENDED ACTION:
Adopt a Resolution Adopting a Mitigated Negative Declaration and Approving a Coastal Development Permit and Site Plan, based on Findings and subject to Conditions of Approval.

REPORT SUMMARY:
On November 19, 2014, the Avalon Planning Commission considered a request to approve a Site Plan and Coastal Development Permit (CDP) to allow the construction and operation of a new 23,044 square-foot Vons Grocery Store at 240 Sumner Avenue, and a Conditional Use Permit to allow a Restaurant/ Bar/Café use within the new store. A Mitigated Negative Declaration (MND) was prepared to assess potentially adverse impacts resulting from the project, together with a Mitigation Monitoring Program that specified all mitigation measures to be completed to reduce potential adverse impacts to levels that would be considered less than significant, in accordance with the California Environmental Quality Act (CEQA). The Planning Commission adopted the MND and approved the Site Plan and CDP, but did not approve CUP to allow Restaurant/ Bar/Café uses within the store.

On December 3, 2014 the Catalina Eucalyptus Sumner Alliance (CESA) filed a timely appeal of the Planning Commission's action challenging the adequacy of the MND requesting that the City Council hear the Project *de novo*. The MND was amended to address the concerns expressed in the appeal letterThe amended MND was noticed and made available for public review, and circulated through the state Office of Planning and Research.

On August 4, 2015, the City Council conducted a duly noticed public hearing to consider the appeal. Following the close of the public hearing, the City Council voted to adopt the amended MND and Mitigation Monitoring Program, upholding the determination of the Planning Commission with respect to the findings that pertain to the Coastal Development Permit and the Site Plan, and approved the Project as presented and modified some conditions of approval to provide additional benefits to the Project..

GOAL ALIGNMENT: Not Aligned

FISCAL IMPACTS: None

CONSEQUENCES OF NOT FOLLOWING RECOMMENDED ACTION: This constitutes the formal action memorializing the City Council's action.

FOLLOW UP ACTION: None

ADVERTISING, NOTICE AND PUBLIC CONTACT: This item was properly listed on the posted agenda pursuant to the Brown Act.

ATTACHMENTS:

Resolution Upholding Planning Commission Decision (2 Exhibits)

- Conditions of Approval dated August 4, 2015.
- Mitigation Monitoring Plan

RESOLUTION NO. ____

A RESOLUTION OF THE CITY COUNCIL OF THE CITY OF AVALON (1) ADOPTING A MITIGATED NEGATIVE DECLARATION; (2) APPROVING A SITE PLAN APPLICATION; AND, (3) APPROVING A COASTAL DEVELOPMENT PERMIT FOR A NEW VONS GROCERY STORE LOCATED AT 240 SUMNER AVENUE (APN 7480-016-009)

WHEREAS, Safeway, Inc. – Vons Division ("Applicant"), submitted a Site Plan application, Coastal Development Permit application, and Conditional Use Permit application for the construction of a 20,000+ square foot grocery store to be located at 240 Sumner in the City of Avalon ("Project"); and

WHEREAS, the Project is intended to replace two existing Vons stores located within the City, which will close upon the opening of the proposed Project; and

WHEREAS, the Project site is designated Commercial in the City's General Plan, and zoned Commercial in the City's Municipal Code; and

WHEREAS, pursuant to Avalon Municipal Code section 9-6.202(a)(1), grocery store uses are permitted within the Commercial Zone; and

WHEREAS, the Project meets the goals and objectives of the Local Coastal Program by providing services to visitors and residents in the Commercial district; and

WHEREAS, pursuant to section 15070 of the State CEQA Guidelines, preparation of a Mitigated Negative Declaration was the appropriate environmental review procedure under the California Environmental Quality Act ("CEQA") because all potential significant impacts of the Project have been mitigated to a level of less than significant; and

WHEREAS, City staff has prepared both a Mitigated Negative Declaration for the Project, as well as a Mitigation Monitoring Plan for the Project; and

WHEREAS, on November 19, 2014 the City's Planning Commission conducted a duly noticed public hearing on the Project, at which time all persons wishing to testify were heard and the Project was fully considered; and

WHEREAS, the Planning Commission adopted the Mitigated Negative Declaration and approved the Coastal Development Permit and Site Plan based on Findings and subject to conditions; and

WHEREAS, the Planning Commission denied the Applicant's request for a Conditional Use Permit to operate a café on site;

WHEREAS, an Appeal of the Planning Commission's adoption of the Mitigated Negative Declaration and approval of the Site Plan and Coastal Development Permit was timely filed for hearing before the City Council; and

WHEREAS, a revised Mitigated Negative Declaration (the "Revised MND") for the Project was prepared, noticed and circulated for public review prior to the hearing of the Appeal before the City Council; and

WHEREAS, on August 4, 2015, the City Council conducted a duly noticed public hearing on the matters subject to the Appeal *de novo*, at which time all persons wishing to testify were heard and the Project was fully considered; and

WHEREAS, the addition of various new conditions of approval at the August 4, 2015 City Council public hearing is hereby expressly declared by the City Council to solely augment the Project's proposal by providing for additional project benefits, and that these additional conditions of approval are not necessary to substantiate the findings of the Revised MND with regard to the significance of the impacts of the Project on the physical environment, and that the mitigation measures contained in the Revised MND and in the associated Mitigation Monitoring Program remain wholly sufficient for that purpose on their own, and therefore revision and recirculation of the Revised MND is not required; and

WHEREAS, the Revised MND was completed in compliance with CEQA, was reviewed and considered by the City Council prior to approval of the Project, reflects the independent judgment of the City Council, and is deemed adequate for purposes of making decisions on the merits of the Project; and

WHEREAS, all of the findings and conclusions made by the City Council pursuant to this Resolution are based upon the entirety of the record of proceedings concerning the Project, which is whereby incorporated herein by this reference.

NOW THEREFORE, THE CITY COUNCIL OF THE CITY OF AVALON DOES HEREBY FIND AS FOLLOWS:

Section 1. The above recitals are true and correct and hereby incorporated as though fully set forth herein.

Section 2. Based on the entire record before the City Council, all written and oral evidence presented to the City Council, and the findings set forth in this Resolution, the City Council grants the Project Site Plan and Coastal Development Permit, subject to the conditions of approval set forth in the attached Exhibit A.

Section 3. The City Council has reviewed and considered the information contained in the Revised MND prepared for the Project and hereby certifies that the Revised MND has been completed in compliance with the requirements of CEQA and the State CEQA Guidelines, and therefore adopts the Revised MND. Based on the Revised MND, and any comments and testimony received pertaining thereto, the City Council hereby finds and determines that, with the incorporation of identified mitigation measures, approval of

the Project will not have a significant effect on the environment. The Mitigation Monitoring Program for the Project, and the mitigation measures contained therein (attached as Exhibit B), are hereby adopted as conditions of approval of the Project.

Section 4. Pursuant to Section 9-8.203 of the Avalon Municipal Code ("Code"), and based upon the entire record before the City Council and all written and oral evidence presented to the City Council, the City Council makes the following findings with respect to the approval of the Project Site Plan:

(a) *Every use, development of land and application of development standards shall take place in compliance with all applicable provisions of this title.*

Finding: The site is located on the east side of Sumner Avenue between Catalina and Sumner Avenues in the Commercial zoning district, and grocery stores are a principal permitted use within this zone. As conditioned, the physical layout, design, and use of the site complies with all development standards for development in the Commercial zoning district.

(b) *Every use, development of land and application of development standards shall be considered on the basis of the suitability of the site for the particular use or development intended, and the total development, including the application of prescribed development standards, shall be so arranged as to avoid traffic congestion, insure the protection of public health, safety and general welfare, prevent adverse effects on neighboring property and shall be in general accord with all elements of the General Plan.*

Finding: Based on the Conditions of Approval and Mitigation Measures, the project will not create traffic congestion, negatively impact the public health, safety and general welfare, adversely affect the neighboring properties and complies with all elements of the General Plan.

(c) *Every use, development of land, application of development standards shall be considered on the basis of suitable and functional development design, but is not intended that such approval be interpreted to require a particular style or type of architecture.*

Finding: The design meets reasonable design expectations to provide a suitable and functional facility. The design will not create traffic congestion, negatively impact the public health, safety and general welfare, nor adversely affect the neighboring properties. The design incorporates aesthetically suitable features. The exterior treatment of the store will reflect a craftsman architectural style combining shiplap siding with stone wainscoting around the foundation of the building. Trellis structures will be installed on portions of the walls facing Beacon Street and Catalina Street. Climbing, flowering vines will be planted and trained to climb the trellises to provide visual interest and to soften the structural elements of the building.

Section 5. Pursuant to Section 9-8.103 of the Code, and based upon the entire record before the Planning Commission and all written and oral evidence presented to the

Planning Commission, the Planning Commission makes the following findings with respect to the approval of the Coastal Development Permit:

1. *The proposed Development conforms to the Certified Local Coastal Program.*

   Finding: The Project does not inhibit access to coastal resources. The Project meets the goals and objectives of the Local Coastal Program by providing services to visitors and residents in the Commercial district. The Project complies with the provisions of the Commercial District, which states that areas so designated on the Land Use Plan may be used for serving resort-recreation and neighborhood commercial retail and service needs, including grocery. Furthermore, the Project is in conformance with the Certified Local Coastal Program for the City of Avalon, which includes the Avalon General Plan and the Local Coastal Plan for Avalon, as these Plans allow the proposed use within the Project site.

2. *For all development seaward of the nearest public highway to the shoreline, the proposed development conforms to the public access and recreation policies of Chapter 3 of the Coastal Act.*

   Finding: The nearest public road to the shoreline is Crescent Dr., and the Project will be located on a site that is on the landward side of Crescent Dr.

Section 6. Consistent with the City's Annual Growth Policy, the City Council hereby finds that the Project would result in the construction of a modern grocery store that would be a significant improvement upon the existing two groceries stores within the City, and that the new store would provide substantially increased utility and benefits to the citizens of the City and its residents. Furthermore, the Project was the subject of an amended Mitigated Negative Declaration demonstrating that all environmental impacts could be mitigated to a level that is less than significant. Thus, the City Council finds that the resulting growth due to the Project is beneficial to the City and its residents and thus is acceptable.

Section 7. Staff is directed to file a Notice of Determination with the County of Los Angeles and the State Clearinghouse within five (5) working days of approval of the Project. The custodian of the record of proceedings for the Project is the Planning Director of the City of Avalon, and the record of proceedings is located at the City of Avalon City Hall, 410 Avalon Canyon Road, Avalon, California.

PASSED, APPROVED AND ADOPTED this 1st day of September, 2015.

Ayes:
Noes:
Absent:
Abstain:

_____
W. F. "Oley" Olsen, Mayor Pro Tem

ATTEST:

_____
Denise A. Radde, City Clerk

EXHIBIT A
CONDITIONS OF APPROVAL

Attachment A

Conditions of Approval

Street Address: 240 Sumner Avenue

A. General Conditions:

1. This Project approval shall expire on August 4, 2018 unless a time extension is requested, approved, and filed with the Planning Department prior to expiration.

2. This Project shall comply with all mitigation measures described in the Mitigated Monitoring Program as adopted with the certification of the Mitigated Negative Declaration on August 4, 2015.

B. Special Conditions:

3. Parcel Map Recording/Covenant for Lot Coverage: Prior to the commencement construction of the Project at the Project site, Applicant shall process or cause to be processed, a parcel map that shall include land for the Vons store and other land not containing any buildings, such that the parcel that includes the Vons store shall have a maximum lot coverage of eighty percent (80%) of gross lot area. Applicant shall record or cause to be recorded a covenant providing that so long as the approved building exists on the site, the maximum lot coverage of the subject parcel shall remain at eighty percent (80%).

4. Conformance with Inclusionary Housing Plan/Transfer of Employees: Prior to commencement of commercial operations at the site, which is the subject of this approval, the Applicant shall cease all commercial operations at the sites located at APN: 7480-016-009, 117 Catalina St. SCICo tenant location M and APN 7480-018-003, 123 Metropole. The projected number of peak season employees at the site which is the subject of this approval shall not exceed the combined number of peak season employees at APN: 7480-016-009, 117 Catalina St. SCICo tenant location M and APN: 7480-018-003, 123 Metropole in the 12 months prior to ceasing operations at each location. Any commercial use of APN: 7480-016-009, 117 Catalina St. SCICo tenant location M] or APN: 7480-018-003, 123 Metropole after cessation of operations pursuant to this condition shall constitute "new commercial development" under Chapter 11 of Title 9 of the Avalon Municipal Code and shall be subject to all requirements therein, regardless of whether any tentative map, parcel map, or site plan is required. Applicant shall record or cause to be recorded certificates with the County Recorder of the County of Los Angeles, which specifically identify APN: 7480-016-009, 117 Catalina St. SCICo tenant location M and APN: 7480-018-003, 123 Metropole and which provide notice of this condition. If the number of peak seasonal employees at the site subject to this approval exceeds the combined number of peak seasonal employees at the sites located at APN: 7480-016-009, 117 Catalina St. SCICo tenant location M and

APN 7480-018-003, 123 Metropole, the Applicant shall submit an Inclusionary Housing Plan that complies with Chapter 11 of Title 9 of the Avalon Municipal Code. The Applicant shall submit an audit of the number of peak season employees at the site which is the subject of this approval within 12 months of ceasing operations at the two locations identified above and shall continue to provide such audits annually thereafter.

5. Minimum Parking Requirements: Parking shown on the Project Site Plan shall not be reduced so long as the newly constructed Vons building remains on the Project site.

6. Trash: A trash enclosure shall be provided adequate to accommodate a cardboard bailer and separation of green/compostable waste from other trash.

7. Parking: Applicant and Owner shall share the cost equally with the City to reprogram the curbside parking in the 200 block of Sumner and Catalina to facilitate additional 1 hour parking.

8. Signage: The Applicant shall be limited to one 8 square foot sign per street frontage (Sumner, Beacon and Catalina). If the sign is internally lit, the sign shall be timed to dim to half illumination upon closing of the store.

9. Fedex/Aeronautical Parking: To prohibit interruption of freight services, plans for reconfiguring the loading area lost as a result of this Project must be submitted prior to issuing a demolition permit for the structures on the proposed Vons location.

10. Deliveries: Deliveries made to the store shall occur only between the hours of 8:00 A.M and 7:00 P.M. Delivery by other vendors to the store location must be accommodated in the loading bay and shall not occur from vehicles stopped on Beacon, Sumner or Catalina Avenues or in the parking lot.

11. Shopping Carts: Applicant may submit to the City a plan for its review and approval wherein shopping carts are allowed for home grocery delivery (in an effort to prevent additional autoette trips to the market). If submitted, said plan shall include a shopping cart retrieval component, which must be submitted to the City for its review and approval. The shopping cart retrieval component of the plan may require the City to modify the Avalon Municipal Code.

12. Grocery Delivery: Consider feasibility of providing or allowing for grocery delivery service.

13. Lighting: To reduce light and glare, a lighting plan will be submitted for approval prior to receiving building permits that ensures that the lighting is adequately shielded and directed to prevent light bleed of more than 5fc beyond the property's boundaries.

14. Water Quality: The Applicant will submit either a Stormwater Pollution Prevention Plan prepared under the NPDES stormwater permit administered

by RWQCB or an Erosion and Sediment control plan as required by Avalon's MS4 permit prior to being issued a grading permit.

15. Drainage and Flooding: The Applicant will comply with City Floodplain Management, AMC Section 6-9.403 and Development Permit and Section 6-9.501 Standards of Construction. In addition, and consistent with AMC Section 6-9.506 the Applicant shall obtain and provide a "No Rise" Certification that certifies the Project will not increase flood heights. The No Rise Certification must be provided to the City prior to the issuance of building permits.

16. Traffic Congestion: To further prevent increase in traffic in relation to the existing traffic load, the Applicant shall submit a construction staging plan, hauling routes, a parking and loading management plan and a truck delivery plan which plans shall be approved by the Planning Department. A flagman or other measures may be required during construction and after construction, especially for store deliveries, during store operations.

17. Following consultation and upon mutual agreement with the Catalina Eucalyptus Sumner Alliance (CESA), at the Applicant's expense, install triple pane or comparable windows for noise reduction on designated structures located on Catalina Avenue and Beacon Street to ensure sound attenuation to "Acceptable Levels" as defined in the City's adopted Noise Element of the General Plan.

18. Construction Project Manager: Applicant must designate a Construction Project Manager, whose contact information, including office and cell phone telephone numbers, as well as email address, must be posted on a conspicuous sign located in plain view from the street(s) at the job site for the duration of the project.

    Recycling Receptacle: If required by State law and to the extent consistent with the City's contract with its solid waste trash hauler and operator of the landfill, Applicant at the Applicant's expense shall, install a recycling receptacle within the premises or develop an on site recylcing program upon completion of construction that allows for customers to receive California Redemption Value (CRV) for recyclable items, such as aluminum cans, glass bottles, etc.

19. Construction Staging Area/Construction Lay-Down Yard: Applicant shall submit a construction staging area/construction lay-down yard plan to the City for its review and approval.

C. The following conditions require additional action by, or documentation from, the applicant before building permits can be issued:

20. Projects resulting in demolition of existing structure or projects exceeding $75,000 in value must provide certification of the condition of the sewer lateral before Building Permits can be issued.

21. Projects involving structures constructed before 1979 and that require any demolition must be assessed for the presence of asbestos, lead and other hazardous materials, which shall be handled in accordance with applicable State codes. Copies of inspection results and shipping manifests (when disposal is required) must be provided prior to issuance of a demolition permit or building permit.

22. Projects requiring excavation and/or grading in a mapped archeological area defined in the Cultural Resources Management Plan for the City, may be required to have a qualified archeological monitor onsite during excavation and/or grading.

23. Projects requiring obstruction of the public right of way, must obtain obstruction permits prior or simultaneous with the building permit.

24. Projects requiring excavation in the public right of way, must obtain excavation permits prior or simultaneous with the building permit.

25. Projects subject to payment of Long Beach Unified School District fees must provide proof of payment or exemption prior to issuance of the building permit.

D. The following conditions apply to all projects:

26. Projects located in the floodplain as defined by the FIRM (Flood Insurance Rate Map), must provide a base flood elevation certificate for the new or substantially improved structure resulting from this application before a Building Permit can be issued.

27. If the City discovers that material facts were not disclosed by Applicant or that facts provided by the Applicant were different than represented, the City may impose additional conditions of approval to mitigate any adverse impacts.

28. The Project shall be developed and maintained in strict accordance with the approved plans unless written approval is given by the Planning Department. Approval by the Planning Department does not waive the requirement that the Project comply with all sections of the Planning and Zoning code and all other applicable sections of the Municipal Code.

29. All construction on the Project shall be limited to Monday through Saturday, 8am to 7pm. No construction shall occur on Sundays.

30. All Project contractors and sub-contractors must maintain a City of Avalon business licenses in compliance with all local, state, and federal laws allowing them to work in the City.

31. Non-Combustible materials shall be used for all roofing materials subject to approval by the Planning Department.

32. Approved fire walls shall be constructed as required by the Los Angeles County Building Code.

33. A dual water system shall be installed and approved by the Planning epartment.

34. The site shall be kept in a neat manner at all times and the landscaping shall be continuously maintained in a healthy and thriving condition.

35. The entire sanitation system shall be connected to the City salt water system.

36. The design and construction of all sewers shall be approved by the Department of Public Works, including the design and construction of sewer connections and laterals.

37. A trash storage area shall be constructed in such a manner to be reasonable shielded from view from the street and of a size capable of containing a trash receptacle and recycling bin, subject to the approval of City staff.

38. The Project shall be under construction (defined as foundations in and framing in progress) within 36 months of this approval or all permits will be null and void.

39. Structural drainage shall be provided by use of roof gutters and downspouts which allow for proper drainage away from the foundation of any structure and which do not cause any pooling of standing water.

40. All plans and specifications must be approved by the City of Avalon Building Department prior to construction beginning.

41. City staff shall review and approve location, size and noise output of mechanical devices.

42. Additional fresh water must be supplied as required by Southern California Edison.

43. All changes mandated by the City of Avalon Building Department that would require an amended site plan must be reviewed and approved by the Planning Commission before any construction takes place.

44. Owner/Applicant must offer to dedicate to the City the following easements measuring at least 10 feet in width, if applicable:
    - Public utilities easement
    - Water line easement
    - Sewer facilities easement
    - Landscape easement
    - Storm drain easement

45. Any existing public improvements which are damaged as a result of construction regarding the Project shall be repaired or replaced to the satisfaction of City staff at the Owner/Applicant's sole cost before a certificate of occupancy can be issued.

46. Owner/Applicant agrees to indemnify, defend, and hold the City harmless, with

counsel reasonably acceptable to the City, from costs and expenses, including attorney fees, incurred by the City or held to be the liability of the City in connection with the City's defense of its actions in any proceeding brought in any State or Federal court challenging the City's actions with respect to the Project. Owner/Applicant understands and acknowledges that the City is under no obligation to defend any legal actions challenging the Project.

47. Any preexisting Municipal Code violations at the property must be resolved prior to issuance of a certificate of occupancy, even if such Code violations are unrelated to the Project.

48. Project must comply with all mitigation measures noted in any related environmental assessments performed in connection with this Project, prior to receiving a certificate of occupancy.

49. All conditions of approval must be completed to the satisfaction of the City Planning Department prior to occupancy of the Project.

50. Project Applicant shall pay the City all statutory fees required by the City's fee ordinance.

65059.00305\13481354.2

EXHIBIT B

MITIGATION MONITORING PLAN

MITIGATION MONITORING PLAN

Project: Vons Grocery Store, 240 Sumner, Avalon, CA

Applicant: Safeway Inc., Vons Division

Lead Agency: City of Avalon

Date: August 2015

Mitigation Measures No. / Implementing Action	Responsible for Monitoring	Monitoring Frequency	Timing of Verification	Method of Verification	Verified Date /Initials
Aesthetics					
Mitigation Measure Aesthetics-1: Lighting. All lighting of the Project, such as exterior building illumination, interior building illumination visible from the outside, and lighting of the loading dock, shall be directed away from residential uses, shielded from such uses, or reduced in intensity until such uses are not subject to substantial amounts of glare. This Mitigation Measure shall be interpreted to complement, and not supersede, the lighting provisions of Municipal Code sections 9-7.607 and 9-7.724, which shall continue to govern the lighting of parking areas and signage, respectively.	City of Avalon, Planning Department	Once	Final site inspection	On-site inspection by City staff	
Air Quality					
Mitigation Measure Air Quality-1: Fugitive Dust. Consistent with SCAQMD Rule 403, during all earth moving and grading phases of construction, the following soil stabilization measures will be implemented to reduce fugitive dust: 1) Apply water to all un-stabilized disturbed areas at least two times per day. If there is any evidence of wind driven fugitive dust, watering frequency shall be increased to a minimum of four times per day, and; 2) Apply water to at least eighty percent (80%) of all inactive disturbed surface areas on a daily basis when there is evidence of wind driven fugitive dust, excluding any areas which are inaccessible to watering vehicles due to excessive slope or other safety conditions; OR apply dust suppressants in sufficient quantity and frequency to maintain a stabilized surface. No water from the City of Avalon's potable water supply will be used for the above-described construction purposes.	City of Avalon, Planning Department	Ongoing, through site preparation and construction activities	During on-site inspections	On-site inspection by City staff	
Biology					
Mitigation Measure Biology-1. If construction is to begin during the bird nesting season (approx. April through mid-summer), a biologist shall be retained to	City of Avalon, Planning	Once, prior to site preparation	Prior to site preparation and	On- and off-site inspection by City	

Mitigation Measures No. / Implementing Action	Responsible for Monitoring	Monitoring Frequency	Timing of Verification	Method of Verification	Verified Date /Initials
conduct a nesting bird survey immediately prior to the commencement of construction activities on the site in order to verify that trees on the same block as the Project site do not contain active nests. If an active nest is found, the biologist shall implement a work-exclusion zone around the subject tree sufficiently large to allow successful completion of the nesting and fledging process (the size shall vary from species to species). Such work-exclusion zone shall be respected by work crews until the young have fledged or the nest is otherwise abandoned.	Department Qualified Biologist	and construction	construction	staff and Qualified Biologist	
Cultural Resources					
Mitigation Measure Cultural Resources-1: Archaeological Discovery. The following practices shall be followed during all phases of site preparation and construction activities: To prevent an adverse change of an archaeological resource, the applicant will engage a qualified professional Archaeologist or an alternate acceptable to the Native American Heritage Commission as a Monitor. The Monitor shall coordinate with the contractor and conduct a pre-job meeting prior to the start of ground disturbing activities. The approved Monitor shall provide a Monitoring Plan based on proposed construction methodology for the project prior to the City Issuing a Grading Permit. If previously unknown archeological resources are encountered during excavation or construction, construction personnel shall be instructed to immediately suspend all activity in the immediate area of the suspected resource and the City of Avalon shall be notified. A qualified professional archaeologist that meets the Secretary of the Interior's standard of qualifications shall be retained to evaluate the finding. Depending upon the significance of the find as determined by the archaeologist, the archaeologist may decide to record the find and allow work to continue. If the discovery proves significant under CEQA, additional work such as preparation of an archaeological treatment plan, testing, or data recovery shall be implementation.	City of Avalon, Planning Department Qualified professional archaeologist, or other qualified professional acceptable to the Native American Heritage Commission	Once (provision of monitoring plan) Once (pre-job meeting) Ongoing monitoring to determine if previously unknown archeological resources are present or encountered during excavation or construction	Prior to issuance of Grading Permit (provision of Monitoring Plan to City) Prior to ground disturbing activities (pre-job meeting) During site preparation and construction (ongoing monitoring)	Plan check and City staff verification of Monitoring Plan submittal Verification of pre-job meeting Ongoing on-site inspections and notification of City staff in the event of a discovery	
Mitigation Measure Cultural Resources-2: Paleontological Discovery. The following practices	Qualified professional	Ongoing during site preparation	Upon the discovery of fossil	On-site inspection, in the	

Mitigation Measures No. / Implementing Action	Responsible for Monitoring	Monitoring Frequency	Timing of Verification	Method of Verification	Verified Date /Initials
shall be followed during all phases of site preparation and construction activities: Should previously undefined fossil bearing formations be uncovered during site preparation, grading, or excavation, construction personnel shall be instructed to immediately suspend all activity in the immediate area of the suspected resource and the City of Avalon notified. A qualified professional paleontologist shall be retained to assess the find. Depending upon the significance of the find as determined by the paleontologist, the archaeologist may decide to record the find and allow work to continue. If the discovery proves significant under CEQA, salvage and recovery of the resource shall be performed.	paleontologist	and construction	bearing formations	event of a discovery of fossil bearing formations	
Mitigation Measure Cultural Resources-3: Burial Discovery. If human remains are encountered during excavation activities, all work shall halt and the County Coroner shall be notified (California Public Resources Code Section 5097.98). The Coroner shall determine where the remains are of forensic interest. If the Coroner, with the aid of the City-approved Archaeologist, determines that the remains are prehistoric, s/he shall contact the Native American Heritage Commission (NAHC). The NAHC shall be responsible for designating the most likely descendent (MLD), who shall be responsible for ultimate disposition of the remains, as required by Section 7050.5 of the California Health and Safety Code. The MLD shall make his/her recommendation within 48 hours of being granted access to the site. The MLD's recommendation shall be followed if feasible, and may include scientific removal and non-destructive analysis of the human remains and any items associated with Native American burials (California Health and Safety Code Section 7050.5). If the landowner rejects the MLD's recommendations, the landowner shall rebury the remains with appropriate dignity on the property in a location that will not be subject to further disturbance (California Public Resources Code Section 5097.98).	City-approved archaeologist City of Avalon, Planning Department Native American Heritage Commission	Ongoing during site preparation and construction	Upon the discovery of human remains	On-site inspection in the event of a discovery of human remains, coroner's report	
Hydrology and Water Quality					
Mitigation Measure Hydro-1: Stormwater Quality. In order to meet requirements pertaining to stormwater	City of Avalon, Planning	Once (submission of	Prior to grading permit	Plan check (submission of	

Mitigation Measures No. / Implementing Action	Responsible for Monitoring	Monitoring Frequency	Timing of Verification	Method of Verification	Verified Date /Initials
quality and the quantity of runoff exiting the site during a stormwater event, the Applicant shall propose and implement operational Best Management Practices, in compliance with NPDES requirements, in order to match post-Project runoff flows with existing condition runoff flows. This may be achieved via the implementation of pervious parking lot surfacing (such as porous concrete or specialty pavers), specialty planters to receive roof and/or parking lot runoff, and onsite detention, such as through the use of rain barrels.	Department	proposed BMPs) Ongoing (implementation of BMPs)	(submission of proposed BMPs) Ongoing during site preparation and construction (implementation of BMPs)	proposed BMPs) Ongoing on-site inspections	
Mitigation Measure Hydro-2: No Rise Certification. Prior to obtaining building permits, the applicant shall provide to the City proof that either a No Rise Certification has been obtained, or that federal flood requirements have been otherwise addressed in compliance with all state and federal laws.	City of Avalon, Planning Department	Once	Prior to grading permit	Plan check and verification by City staff	
Noise					
Mitigation Measure Noise-1.1: Operation Phase Noise (Mechanical Systems). The proposed Project's mechanical system will incorporate noise mitigation measures to meet the County Noise Ordinance standards, as stated within the Noise Survey Report (i.e., 60 dBLaeq from 7am to 10pm, and 55 dBLaeq from 10pm to 7am). Noise mitigation measures shall include: (1) selection of quiet mechanical equipment with no tonal character; (2) solid parapet wall construction at the perimeter of the building to a minimum height which blocks line of sight to roof mounted mechanical equipment from nearby residential properties and to contain any mechanical noise within the space; and (3) sound attenuators and/or acoustic louvers at air passage openings to mechanical spaces. This will provide attenuation of noise from either AHU or refrigeration equipment.	City of Avalon, Planning Department	Once	Final site inspection	On-site inspection	
Mitigation Measure Noise-1.2: Operation Phase Noise (Loading Dock/Delivery Area). The Project's loading dock/delivery area design will incorporate noise mitigation measures (as stated in the Noise Survey Report) to minimize the generation of onsite noise. Mitigation measures shall include: (1) provisions of an	City of Avalon, Planning Department	Twice	Prior to building permit Final site	Plan check and verification by City staff On-site inspection	

Mitigation Measures No. / Implementing Action	Responsible for Monitoring	Monitoring Frequency	Timing of Verification	Method of Verification	Verified Date /Initials
enclosed loading area with openings to allow for the truck to back up into the building. (2) Acoustic treatment (mineral fiber panels or equivalent min 2" thickness) shall be provided to reduce potential noise reflection and build up.			inspection		
Mitigation Measure Noise 2.1: Construction Phase Noise (Construction Hours). Construction activities shall be prohibited between the hours of 7:00 p.m. and 8:00 a.m., and no construction is permitted on Sundays, with the exception of emergency construction work.	City of Avalon, Planning Department	Ongoing	Throughout site preparation and construction phases	On-site inspections	
Mitigation Measure Noise 2.2: Construction Phase Noise (Mufflers). All construction equipment with internal combustion engines used on the Project site shall be properly muffled and maintained in good working condition.	City of Avalon, Planning Department	Ongoing	Throughout site preparation and construction phases	On-site inspections	
Mitigation Measure Noise 2.3: Construction Phase Noise (Idling). Unnecessary idling of internal combustion engines shall be strictly prohibited.	City of Avalon, Planning Department	Ongoing	Throughout site preparation and construction phases	On-site inspections	
Mitigation Measure 2.4: Construction Phase Noise (Stationary Noise Sources). All stationary noise generating construction equipment, such as air compressors and portable power generators, shall be located as far as possible from noise-sensitive receptors, such as schools and existing residences.	City of Avalon, Planning Department	Ongoing	Throughout site preparation and construction phases	On-site inspections	
Mitigation Measure 2.5: Construction Phase Noise (Noise Complaints). Prior to the issuance of grading permits, the Project site shall be posted with the name and contact number of the lead contractor in a location visible from Avalon Canyon Road so that the contractor can be made aware of noise complaints.	City of Avalon, Planning Department	Once	Prior to issuance of grading permit	City staff verification	
Mitigation Measure 2.6: Construction Phase Noise (Construction Equipment Parking). Construction equipment, vehicles, and employees associated with the development of the Project shall not be permitted to park on residential streets.	City of Avalon, Planning Department	Ongoing	Throughout site preparation and construction phases	On-site inspections	
Mitigation Measure 2.7: Construction Phase Noise (Staging Plan). A Construction Staging Plan shall be submitted with a schedule that includes material storage locations and parking.	City of Avalon, Planning Department	Once	Prior to Grading Permit	Plan check and City staff verification	

Mitigation Measures No. / Implementing Action	Responsible for Monitoring	Monitoring Frequency	Timing of Verification	Method of Verification	Verified Date /Initials
Population/Housing					
Mitigation Measure Population/Housing-1: Inclusionary Housing. Applicant will provide an Inclusionary Housing Plan as required by Avalon Municipal Code for approval by the City, which will address the housing needs of one half the number of additional peak season employees expected at the new Vons store. The City shall apply the Inclusionary Housing Ordinance to any new uses of the two vacated sites, as well, in order to ensure comprehensive coverage of all housing impacts.	City of Avalon, Planning Department	Once	Prior to issuance of certificate of occupancy	Verification of Inclusionary Housing Plan submittal	
Transportation/Traffic					
Mitigation Measure Transportation-1: Sumner Improvements. The Project shall incorporate (1) the relocation of a stop sign from the existing position on Sumner just above the northern continuation of Beacon Street to a position on Sumner just north of the Project entry; and (2) a crosswalk across Sumner just south of the Project entry.	City of Avalon, Planning Department	Twice	Prior to building permit Final site inspection	Plan check and City staff verification On-site inspection	

CITY OF AVALON CITY COUNCIL

MEETING DATE: September 1, 2015 **AGENDA ITEM:** 8

ORIGINATING DEP: Administration **CITY MANAGER:** BH

PREPARED BY: Tiffany Bose, Human Resources Advisor

SUBJECT: Drug Free Workplace Act & Department of Transportation Drug and Alcohol Testing Policy

---

RECOMMENDED ACTION(S): That the City Council approve Policy P-1, Drug Free Workplace Act & Department of Transportation Drug and Alcohol Testing Policy.

REPORT SUMMARY: In order to promote public safety and a drug-free workplace, the U.S. Department of Transportation's (DOT) Federal Motor Carrier Safety Administration (FMCSA) requires that employers have a drug and alcohol testing program for employees working in safety-sensitive positions that operate vessels, drive, or are available to operate vessels or drive, or provide support for commercial motor vehicles for business purposes. Policy P-1 requires that employees be tested in a variety of circumstances as defined in policy for the presence of controlled substances and alcohol and restates the City's "zero-tolerance" policy of maintaining a drug and alcohol free workplace.

GOAL ALIGNMENT: City Policy.

FISCAL IMPACTS: The recently adopted fiscal year 2015/2016 budget already includes money set aside for drug testing under the recruitment and drug-free workplace categories.

CONSEQUENCES OF NOT FOLLOWING RECOMMENDED ACTION: The City will be out of compliance with the federal regulations.

FOLLOW UP ACTION: To be administered by the Human Resources Department and disseminated to all employees and added to the City's intranet website.

ADVERTISING, NOTICE AND PUBLIC CONTACT: This item was properly listed on the posted agenda pursuant to the Brown Act.

ATTACHMENTS: Drug Free Workplace Act & Department of Transportation Drug and Alcohol Testing Policy, Policy P-1.

CITY OF AVALON
Drug and Alcohol Testing Policy

Date: 9/1/2015
Policy No: P1

As with any City policy, the CITY OF AVALON reserves the right to change, alter, amend, and interpret this policy with or without prior notification.

The purpose of this policy is to assure worker fitness for duty and to protect our employees and the public from risks posed by the use of alcohol or controlled substances. The City is committed to promoting a drug-free workplace to ensure that employees of the City, particularly those involved in safety-sensitive transportation activities avoid problems created by the use of alcohol or controlled substances.

The City of Avalon is legally required to enforce Federal DOT regulations and implement controlled substance and alcohol testing for employees who require a commercial driver's license. This includes testing requirements and consequences to employees in safety sensitive positions who have been found to use controlled substances and alcohol as outlined in this policy. The City is not, however, limited to testing only employees subject to Federal DOT regulations. Other employees of the City may also be tested pursuant to the terms of this policy.

The "use" of controlled substances means presence in an employee's body system while on duty. A positive test is sufficient to support a finding of "use." The "use" of alcohol means the presence in an employee's body system while on duty at an unacceptable level. This unacceptable level is defined in detail in this policy. As such, the purpose of this policy is to assure worker fitness for duty and to protect City employees, customers, and the public from the safety and health risks posed by the misuse of alcohol or controlled substances. This policy is also intended to comply with all applicable federal, state and local legislation and regulations governing workplace anti-drug use and alcohol misuse programs in the transportation industry; including, but not limited to:

- The United States Department of Transportation's Federal Motor Carrier Safety Administration (FMCSA) enacted 49 CFR Part 382 and the United States Coast Guard (USCG) enacted 46 CFR 4, 5 and 16 that mandate urine drug testing and breathalyzer alcohol testing for safety-sensitive positions and prevents performance of safety-sensitive functions when there is a positive test result.
- The United States Department of Transportation has also enacted 49 CFR Part 40 (Procedures for Transportation Workplace Drug and Alcohol Testing Programs) that sets standards for the collection and testing of urine and breath specimens.
- In addition, the United States Department of Transportation has enacted 49 CFR Part 29, (The Drug-Free Workplace Act of 1988) which requires the establishment of drug free workplace policies and the reporting of certain drug-related offenses to the Department of Transportation. The policy incorporates those requirements of safety-sensitive employees and others when so noted.

Further the City is subject to the Drug-Free Workplace Act of 1990. The Drug-Free Workplace Act of 1990 requires that every person or organization awarded a contract or grant for procurement of any property or service from any State agency must certify that it will provide a drug-free workplace by doing certain specified acts. These acts include:

- Publishing a statement notifying employees that the unlawful manufacture, distribution, dispensation, possession or use of a controlled substance is prohibited in the City's workplace and specifying actions which will be taken against employees for violations of the prohibition;
- Establishing a drug-free awareness program to inform employees about the dangers of drug abuse in the workplace, the City's policy of maintaining a drug-free workplace, the availability of drug counseling, rehabilitation and employee assistance programs and the penalties imposed upon employee for drug abuse violations; and
- Requiring that each employee engaged in the performance of the contract or grant be given a copy of the aforementioned statement notifying employee of the drug free work place and that as a condition of employment on the contract or grant, the employee agree to abide by the terms of the statement.

This Policy shall apply to the projects and grants covered by the Drug Free Workplace Act of 1990. However, in addition to this general policy, all employees who work on those projects will be given a copy of a certification document to sign prior to the commencement of work on any such project. If outside contractors are used for the purposes of working on one of these projects, they will also be required to sign a drug free workplace certification.

The CITY OF AVALON recognizes that the use of alcohol and/or the use of controlled substances in the workplace is not conducive to safe working conditions. In order to promote a safe, healthy and productive work environment for all employees, it is the objective of the City to have a work force that is free from the influence of alcohol and controlled substances.

A. APPLICABILITY

This policy applies to all employees, volunteers, and contractors when they are on City property or when performing any City related business. It further applies to off-site lunch periods and breaks when an employee is scheduled to return to work or is on-call. Visitors, vendors, volunteers and contracted employees are governed by this policy while on City premises, and they will not be permitted to conduct business if found to be in violation of this policy. Specific provisions of the policy are solely applicable to those employees who are working in safety-sensitive positions (e.g. random drug testing).

A listing of the CITY OF AVALON safety-sensitive employees will be maintained by the Human Resources Department. If you are unsure if your position qualifies as safety sensitive, please contact Human Resources. An employee is considered to be performing a job function while actually performing duties related to the job function, preparing to perform such duties, on-call or available for such duties as described in the job description, or immediately following the performance of such duties.

All employees of the CITY OF AVALON are subject to pre-employment, reasonable suspicion/cause, post-accident, return-to-duty and follow-up controlled substance and/or alcohol testing. Specific employees are also subject to random, periodic and post-serious marine incident (SMI) controlled substance and/or alcohol testing. The City may impose, in addition to this policy, any disciplinary action up to and including termination, for cause, in accordance with the Personnel Rules and Regulations or any MOU, for violations of this policy.

PRE-EMPTION OF STATE AND LOCAL LAWS

If any conflict occurs between State and local laws and any requirement of the above-mentioned Federal regulations, the Federal regulations prevail. However, Federal regulations do not preempt provisions of State criminal laws that impose sanctions for reckless conduct attributed to prohibited drug use or alcohol misuse, whether the provisions apply specifically to transportation employees, employers, or the public in general.

VOLUNTARY ADMITTANCE: A Rehabilitation Program is available to all employees who voluntarily request treatment. The City encourages its employees to participate in the City sponsored Employee Assistance Program for counseling and treatment for drug use and alcohol abuse. Employees who feel they have a problem with illegal drugs and/or alcohol may request voluntary admission to a rehabilitation program. Requests must be submitted to the designated employer representative (DER) or his/her designee for review. Program costs and subsequent controlled substance and/or alcohol testing costs will be paid by the employee. An employee failing to complete the program will be subject to termination from employment. An employee completing a rehabilitation program must agree to and sign a Last Chance Agreement, pass a return-to-duty controlled substance and/or alcohol test and be subject to unannounced follow-up testing for 36 months following return to duty. A positive result on the return-to-duty test or on the unannounced follow-up tests within a 36 month period will result in termination from employment.

Employees may use accumulated sick leave, vacation and floating holidays, if any, to participate in the prescribed rehabilitation program; unless the employee has been suspended for cause from their position without pay, such as in the case of misconduct (such as in cases of violating this policy), gross negligence, or violations of codes of conduct.

B. PROHIBITED SUBSTANCES

"Prohibited substances" addressed by this policy include the following:

Controlled Substance:

Amphetamines, barbiturates, benzodiazepines, cocaine, marijuana, methadone, methaqualone, opiates, phencyclidine (PCP), and propoxyphene for all employees, including safety-sensitive employees tested under City authority.

Alcohol

"Alcohol" is defined as: the intoxicating agent in beverage alcohol, ethyl alcohol, or other low molecular weight alcohol, including methyl or isopropyl alcohol. The use of beverages or substances, including any medication, containing alcohol such that it is present in the body at a level in excess of that stated in Department of Transportation guidelines while actually performing, ready to perform, or immediately available to perform any City business is prohibited.

C. PROHIBITED CONDUCT

Manufacture, Trafficking, Possession, and Use

Any employee engaging in the unlawful manufacture, distribution, dispensing, possession or use of a controlled substance or alcohol on City premises, in City vehicles or while conducting City business on or off the premises is absolutely prohibited. Violation may result in termination, and will result in removal from duty and referral to a Substance Abuse Professional (SAP). Law enforcement shall be notified, as appropriate, where criminal activity is suspected.

Impaired/Not Fit for Duty

Any safety-sensitive employee who is reasonably suspected of being impaired, under the influence of a prohibited substance, or deemed unfit for duty shall be removed from safety-sensitive job duties and be required to undergo a reasonable suspicion controlled substance or alcohol test. Safety-sensitive employees failing to pass this reasonable suspicion controlled substance or alcohol test shall remain off duty and be referred to a Substance Abuse Professional (SAP). A controlled substance or alcohol test is considered positive (failed) if the individual is found to have a quantifiable presence of a prohibited substance in the body above the minimum thresholds defined in the Department of Transportation guidelines. Notably, all employees, regardless of their safety sensitive status are subject to reasonable suspicion drug testing.

If an employee's alcohol test result is between 0.02 and 0.039, the employee will be removed from safety-sensitive functions for twenty-four (24) hours. The employee will not work during the twenty-four (24) hour time period. After twenty-four (24) hours have passed, this employee may be allowed to return to work, so long as the employee complies with the requirements set forth below in the section titled "Treatment/Rehabilitation Program".

Alcohol Use

No safety-sensitive employee may report for duty or remain on duty when his/her ability to perform assigned functions is adversely affected by alcohol or when his/her breath alcohol concentration is 0.02 or greater. No safety-sensitive employee shall use alcohol while on duty or while performing safety-sensitive functions. No safety-sensitive employee (crewmember) shall use alcohol within four (4) hours prior to reporting for duty nor

during hours that he/she is on call. No safety-sensitive employee shall use alcohol within four (4) hours prior to reporting for duty nor during hours that he/she is on call. No safety-sensitive employee may use alcohol for eight (8) hours following an accident, or until the employee has undergone a post-accident test, whichever occurs first. Violation of this provision is prohibited and will subject the employee to removal from duty and referral to a Substance Abuse Professional (SAP). It is the City's policy to terminate any employee whose BAC is 0.04 or higher. It is also the City's policy that an employee may be terminated for cause after the first alcohol abuse offense pursuant to this policy. This zero tolerance policy does not excuse the City from evaluating any mitigating factors as required under the Americans with Disabilities Act or other laws and engaging in the Skelly process with the employee.

Compliance with Testing Requirements

All employees, including safety sensitive employees are subject to pre-employment, post-accident, reasonable-suspicion, or follow-up drug or alcohol testing. Safety-sensitive employees are also subject to random drug testing. Any employee who refuses to submit to a request for testing, who provides false information in connection with a test, is untruthful in their statements when asked about their use of alcohol or drugs, or who attempts to falsify test results through tampering, contamination, adulteration, or substitution shall be removed from duty immediately and be referred to a Substance Abuse Professional (SAP). Refusal to submit to a test can include an inability to provide a urine specimen or breath sample without a valid medical explanation, as well as a verbal declaration, obstructive behavior or physical absence resulting in the inability to conduct the test.

Treatment/Rehabilitation Program

An employee with a controlled substance and/or alcohol problem will be afforded an opportunity for treatment in accordance with the following provisions:

Positive Controlled Substance and/or Alcohol Test: Any employee who has a verified positive drug test result and/or alcohol concentration of 0.04 or above, or refuses to submit to a drug or alcohol test result will be immediately taken out of safety-sensitive duty, placed on administrative leave, referred to an SAP for evaluation, education or treatment and provided education materials and terminated. If an employee tests positive for drug(s) and/or alcohol or refuses to submit to a test when required, the City shall advise the individual of the resources available for evaluating and resolving problems associated with prohibited drug use and alcohol misuse and document such referral. Program costs and subsequent controlled substance and/or alcohol testing costs will be paid by the employee. It is the City's policy to terminate any employee whose BAC is 0.04 or higher. It is also the City's policy that an employee may be terminated for cause after the first controlled substance abuse offense pursuant to this policy. This zero tolerance policy does not excuse the City from evaluating any mitigating factors and engaging in the Skelly process with the employee.

Referral, Evaluation and Treatment: There is an exception to the zero tolerance policy for employees who test positively for alcohol, between .02 and .039. In that circumstance, the employee will be referred to the Substance Abuse Professional (SAP).

When recommended by the SAP participation and completion of the rehabilitation program is mandatory. Failure of an employee to attend and/or complete a prescribed program will result in termination from employment. However, if an employee follows the rehabilitation program recommended by the SAP, tests negative on the Return-To-Duty Drug Test and agrees to and signs a Last Chance Agreement and Return-To-Duty Agreement, then the employee will not be terminated based on the previous positive test. If the SAP does not recommend the rehabilitation program, then the employee can return upon a negative Return-To-Duty Drug Test, so long as the employee signs a Last Chance Agreement and Return-To-Duty Agreement. As is mentioned above, this accommodation will only be afforded when an employee's alcohol test result is between 0.02 and 0.039; and not higher than a BAC of 0.04. The duration and frequency of follow-up testing will be determined by the SAP but will not be shorter than one year of testing or longer than five years of testing.

D. NOTIFYING THE CITY OF CRIMINAL CONVICTION

Under the DFWA, employees are prohibited from engaging in the unlawful manufacture, distribution, dispensing, possession, or use of a controlled substance in the workplace. All employees that are subject to DOT regulations are required to notify management in writing of any criminal drug or alcohol statute convictions he/she receives for a violation occurring in the workplace, no later than five calendar days after such a conviction. Within 10 calendar days of receiving such notice, the City shall provide written notification of the conviction to the appropriate regulating or licensing authority when required by regulation. Within 30 calendar days of receiving notice of the conviction, the City shall take appropriate disciplinary action, or require the employee to participate and successfully complete a drug rehabilitation program. Law enforcement shall be notified, as appropriate and when legally required, where criminal activity is suspected.

E. PROPER APPLICATION OF THE POLICY

The City is dedicated to assuring fair and equitable application of this Substance Abuse Policy. Therefore, supervisors are required to administer all aspects of the policy in an unbiased and impartial manner. Any supervisor who knowingly disregards the requirements of this policy, or who is found to deliberately misuse the policy with respect to his/her subordinates shall be subject to disciplinary action, up to and including termination.

F. TESTING FOR PROHIBITED SUBSTANCES

Analytical urine controlled substance testing and breath testing for alcohol will be conducted as required under Department of Transportation guidelines. These same guidelines will be used for all employees, not just the employees subject to the DOT. All employees shall be subject to testing prior to employment, for reasonable suspicion, and following an accident, as defined in the Department of Transportation guidelines. Safety-sensitive employees who perform safety-sensitive functions as defined in the Department of Transportation guidelines shall also be subject to testing on randomly selected, unannounced basis.

Testing shall be conducted in a manner to assure a high degree of accuracy and reliability and using techniques, equipment, and laboratory facilities which have been approved by the Department of Health and Human Services (DHHS). All testing will be conducted consistent with the procedures put forth in the Department of Transportation guidelines.

The controlled substances that will be tested for include marijuana, cocaine, opiates, amphetamines, and phencyclidine (PCP). An initial controlled substance screen will be conducted on each specimen. For those specimens that are positive, a confirmatory Gas Chromatography/Mass Spectrometry (GC/MS) test will be performed. The test will be considered positive if the controlled substance levels present are above the minimum thresholds established in the Department of Transportation guidelines.

Tests for alcohol concentration will be conducted utilizing an approved Evidential Breath Testing device (EBT) operated by a trained Breath Alcohol Technician (BAT). If the initial test indicated an alcohol concentration of 0.02 or greater, a confirmation test will be performed to confirm the result of the initial test. An employee who has a confirmed alcohol concentration of 0.02 but less than 0.04 will be removed from his/her position for at least twenty-four hours. If the retest results in an alcohol concentration of 0.02 or less, the employee will not be removed from his/her position. An alcohol concentration of 0.04 or greater on the retest will be considered a positive alcohol test and in violation of Department of Transportation guidelines and this policy.

Any employee who has a confirmed positive controlled substance or alcohol test will be removed from his/her position, informed of educational and rehabilitation programs available, and evaluated by a Substance Abuse Professional (SAP).

The City affirms the need to protect individual dignity, privacy and confidentiality throughout the testing process.

Employees in Safety-sensitive positions will be tested under any of the following circumstances. Non-safety sensitive positions will not be subject to random drug testing or periodic testing. Only specific positions will be subject to post-marine incident testing.

Pre-Employment Testing

All candidates for employment for safety-sensitive positions, including any employee transferring from a non-safety-sensitive to a safety-sensitive position will be required to undergo a pre-employment drug test at a time and place designated by the City. The regulations require urine controlled substance testing of candidates for positions that require Class A or B drivers' licenses. Candidates who have a verified positive controlled substance test may have their offer of employment rescinded. An employee who transfers, demotes, or promotes into a position that requires a Class A or B driver's license will be subject to urine testing prior to starting the new assignment. A verified negative drug test result must be received from the Medical Review Officer (MRO) before an employee or applicant can be allowed to perform any safety-sensitive function for the first time. If a pre-employment test is canceled, the individual will be required to undergo another test and successfully pass the test with a verified negative result before performing

safety-sensitive duties. Receipt of satisfactory test results is required prior to employment and failure of a controlled substance test will disqualify the applicant from further consideration for employment.

Effective July 1, 2015, and in accordance with the revised 49 CFR Part 40, the City must make good faith efforts to obtain the previous two (2) years DOT drug and alcohol testing results information for those applicants who worked for DOT regulated employers. The City will obtain a written consent from the employee that allows their previous DOT regulated employers to release drug and alcohol testing information. If the employee refuses to provide the written consent, he or she will not be hired into the safety-sensitive position. When a covered employee or applicant has previously failed or refused a pre-employment drug test administered under this part, the employee must provide the employer proof of having successfully completed a referral, evaluation and treatment plan.

In addition, if the employee has not performed any safety-sensitive function for at least thirty (30) consecutive calendar days regardless of the reason, and has been out of the random pool during that time, the employee must pass a pre-employment drug test before he or she is allowed to return to performing safety-sensitive duties.

Pre-employment testing also applies to all other candidates for City employment, not strictly those candidates that are safety sensitive and/or covered by DOT regulations.

Reasonable Suspicion Testing

All safety-sensitive employees will be subject to urine and /or breath testing when there is a reason to believe that controlled substances or alcohol use is adversely affecting job performance and only if a reasonable suspicion observation is made just before, during, or just after the employee's performance of a safety-sensitive function. The employee will be escorted to the collection site and told not to put anything in his/her mouth until the drug and alcohol test has been completed. If the drug and alcohol test is not conducted within two (2) hours, the reason(s) for the delay must be documented and kept in the employee's reasonable suspicion test file. All attempts to complete the drug and alcohol test must cease after eight (8) hours. Under this policy, an employee is not allowed to perform any safety-sensitive function until the City has received a negative test result for both drug and alcohol tests. An employee whose drug test and alcohol test produces a negative result shall be promptly returned to his or her regular work and be made whole for any lost wages, unless the employee is suspended for any additional purposes concurrent with the waiting of the test results. A reasonable suspicion referral for testing will be made on the basis of documented objective facts and circumstances which are consistent with the effects of substance abuse. Examples of reasonable, individualized suspicion include, but are not limited to, the following:

1. Adequate documentation of unsatisfactory work performance or on-the-job behavior.
2. Physical signs and symptoms consistent with prohibited substance use.
3. Occurrence of a serious or potentially serious accident that may have been caused by human error.

4. Fights (to mean physical contact), assaults and flagrant disregard or violations of established safety, security, or other operation procedures.

Reasonable suspicion determinations will be made by a supervisor who has received training to detect the signs and symptoms of illegal drug and/or alcohol use and who reasonably concludes that an employee may be adversely affected or impaired in his/her work performance due to prohibited substance abuse or misuse.

Supervisors of the covered employees must attend at least one hour of training on alcohol misuse and at least one hour of training on illegal drug use. This training must cover the physical, behavioral, speech and performance indicators of probable alcohol misuse and controlled substance use.

Reasonable suspicion testing also applies to all other candidates for City employment, not strictly those candidates that are safety sensitive and/or covered by DOT regulations.

Periodic Testing

Except as provided below, periodic testing for dangerous drugs is required in the following situations:

A. As part of a required annual physical examination for a pilot;
B. At least 185 days prior to applying for an original issuance of a license, a renewal or raise in grade of a license, a certificate of registry (COR) or raise in grade of COR, an original issuance or reissuance of a merchant mariner's document, or the first endorsement as an able seaman, life boatman, qualified member of the engine department, or tankerman. The applicant shall submit the results of all such tests to the USCG Regional Examination Center.

A periodic test is not required (Exceptions) if:

A. The person has passed a chemical test for dangerous drugs within the last six months, with no subsequent positive tests during the remainder of the six-month period; or
B. During the previous 185 days, the person has been subject to a random drug testing program for at least 60 days and has not failed or refused to participate in a chemical test for dangerous drugs.

Post-Accident Testing

Every employee must immediately notify their supervisor when an accident has occurred. Any employee will be required to undergo controlled substance testing if they are involved in an accident with any City equipment or vehicle that results in an injury or a fatality. This includes all employees who are on duty and operating the equipment or vehicle and any other employee whose performance could have contributed to the injury or accident. A post-accident test will be conducted if an accident results in injury or a fatality: (1) which requires transportation to a medical treatment facility; (2) where one or more pieces of equipment or vehicles incurs disabling damage that requires extensive

repair or towing; (3) when required by Workers' Compensation Guidelines; or (4) when a safety-sensitive employee receives a citation under State or local law for a moving traffic violation arising from an accident.

Following an accident, the employee will be tested as soon as possible. The alcohol test should be administered within two (2) hours of the accident. If testing cannot be completed within two (2) hours a report must be filed documenting why attempts were unsuccessful and attempts to collect must continue. If The City is unable to obtain an alcohol test within eight (8) hours, attempts to collect must cease and the two (2) hours written report must be updated with an explanation of the reason(s) the test could not be performed. An employee is prohibited from alcohol use for eight (8) hours following the accident or until he or she undergoes a post-accident alcohol test, whichever occurs first. Employees in safety-sensitive positions that are subject to post-accident testing are required to remain readily available for testing for the next eight (8) hours for an alcohol test and for the next thirty-two (32) hours for a drug test, unless tested or excused from testing. Except in medical emergencies, failure of any employee to remain readily available for drug and/or alcohol testing will be considered a refusal to submit to testing. Any employee who leaves the scene of the accident without appropriate authorization prior to submission to controlled substance and alcohol testing will be considered to have refused the test and will be subject to termination. Post-accident testing of safety-sensitive employees will include not only the operation personnel, but any other covered employees whose performance could have contributed to the accident.

Nothing in this section shall be construed to require the delay of necessary medical attention for the injured following an accident or to prohibit a covered employee from leaving the scene of an accident for the period necessary to obtain assistance in responding to the accident or to obtain necessary emergency medical care.

If it is determined that a post-accident test is required, the employee's supervisor must notify the DER within twenty-four (24) hours of the accident.

If the City is unable to perform post-accident tests within the required period noted above, the City may use the post-accident test results administered by State or local law enforcement personnel under their own authority, provided the test conforms to applicable federal, state, and local requirements and the results are obtained by the City.

Following a post-accident test, the employee is not allowed to perform any safety-sensitive function until the City has received negative test results. An employee whose drug test and/or alcohol test produces a negative result shall be promptly returned to his or her regular work and be made whole for any lost wages, unless the employee is suspended for any additional purposes concurrent with the waiting of the test results.

Post-Serious Marine Incident (SMI) Testing

Safety-sensitive employees directly involved in a serious marine incident must be chemically tested for evidence of illegal drugs and/or alcohol. A Serious Marine Incident means any marine casualty or accident, required by USCG regulations to be reported to the Coast Guard, and resulting in any of the following:

A. One or more deaths;

B. Injury to a Crewmember, passenger or other person which requires professional medical treatment beyond first aid;
C. Damage to property over $100,000;
D. Actual or constructive total loss of any vessel subject to inspection under 46 USC § 3301;
E. Actual or constructive total loss of any self-propelled vessel of 100 gross tons or more which is not subject to inspection under 46 USC § 3301;
F. Discharge of 10,000 gallons or more of oil into U.S. navigable waters (whether or not a marine casualty was involved);
G. A reportable discharge of a hazardous substance into U.S. waters, or release of reportable quantities into the U.S. environment (whether or not a marine casualty was involved).

Random Testing

Employees working in safety-sensitive classifications will be subjected to randomly selected, unannounced testing. Note, there are some safety-sensitive positions that are not subject to DOT regulations. The random selection will be by a scientifically valid method. The employer must annually test at least 50% of the total number of covered employees on a random basis each year for controlled substances and 10% for alcohol. The test must be unannounced, with all employees selected from a random pool. Individuals in the pool may be randomly selected for drug testing only, alcohol testing only or may be randomly selected for both drug and alcohol testing. As is the nature of the random method, it is possible that some employees will be selected several times in one year, and other employees not be selected for several years. When an individual is randomly selected for both drug and alcohol testing, these tests will be administered during a single visit to the collection facility to minimize the number of work disruptions. Each safety-sensitive employee will have an equal chance of being tested each time selections are made. Safety-sensitive employees will be tested either just before departure, or during duty, or just after the employee has ceased performing his/her duty.

Return-to-Duty Testing

All employees, including safety-sensitive employees who previously tested positive on a controlled substance and/or alcohol test must be evaluated and released to duty by the Substance Abuse Professional (SAP) before returning to duty. The employee needs to have a verified negative controlled substances test or if applicable, a breath alcohol test value less than 0.02. Employees will be required to undergo unannounced follow-up controlled substance and/or alcohol breath testing following returning to duty. The duration and frequency will be determined by the SAP. However, it shall not be less than 6 tests during the first l2 months, or longer than 60 months in total, following return to duty.

Employees who have been on an approved or unapproved leave from the workplace for more than thirty (30) days are required to submit to a drug and alcohol test prior to returning to work in a safety-sensitive position. The test must produce a negative result for drugs, and a negative result of less than 0.04 for alcohol before the employee is returned-to-duty. The City has a zero tolerance policy regarding drug and alcohol abuse. Therefore, it is the City's policy that any employee who tests positive for drugs and/or alcohol for the first offense may be terminated under this policy.

Employee Requested Testing

Any employee who questions the result of a required controlled substance test under Department of Transportation guidelines may request that an additional test be conducted. This additional test may be conducted at the same laboratory or at a different DHHS certified laboratory. The test must be conducted on the split sample that was provided at the same time as the original sample. All costs for such testing are to be paid by the employee unless the second test invalidated the original test. The method of collecting, storing, and testing the split sample will be consistent with the procedures set forth in the Department of Transportation guidelines. The safety-sensitive employee's request for a retest must be made to the MRO within 72 hours of notice of the initial test result. Requests after 72 hours will only be accepted if the delay was due to documentable facts that were beyond the control of the employee.

G. *PROCEDURES - CHAIN OF CUSTODY FOR CONTROLLED SUBSTANCE SPECIMENS*

1. At the time a specimen is collected, the employee will be given a copy of the specimen collection procedures.

2. Urine will be in a wide-mouthed clinic specimen container which will remain in full view of the employee until split, transferred to, sealed and initialed in two tamper-resistant urine bottles.

3. Immediately after the specimens are collected, the urine bottles will, in the presence of the employee, be labeled and then initialed by the employee. If the sample must be collected at the site other than the controlled substance and/or alcohol testing laboratory, the specimens will then be placed in the transportation container. The container will be sealed in the employee's presence and the employee will be asked to initial or sign the container. The container will be sent to the designated testing laboratory on that day or the earliest business day by the fastest available method.

4. The technician completes the Federal Chain of Custody form certifying that the specimen is properly collected, identified and labeled and attached to and mailed with the specimen.

H. *PROCEDURES - SPECIMEN COLLECTION OF STRANGE AND/OR UNRECOGNIZABLE SUBSTANCES*

1. An employee is observed with a strange and/or unrecognizable substance.

2. The supervisor, in the presence of a witness, places the strange and/or unrecognizable substance into a clear plastic bag. The bag is sealed, labeled and signed by both the supervisor and a witness.

3. An incident report is made and signed by both the supervisor and a witness.

4. The plastic bag containing the specimen and a copy of the incident report is taken to the collection site for transportation to the laboratory for analysis.

5. If a verified adulterated or substituted drug test result is received, this will be handled in the same manner as a confirmed positive test for a controlled substance and the employee will immediately be removed from performing safety-sensitive functions. This action will be taken upon receiving the initial report of the verified adulterated or substituted test result. If a controlled substance test result is received indicating that the employee's specimen was negative dilute with a creatinine level greater than or equal to 2 mg/dL and less than 5 mg/dL, a second collection must take place immediately under direct observation.

I. PROCEDURES - ALCOHOL CONCENTRATION

1. The employee and the on duty Breath Alcohol Technician (BAT) complete the alcohol testing form to ensure that the results are properly recorded, and an initial breath sample is taken.

2. If the results of the initial test show an alcohol concentration of 0.02 or greater a second or confirmation test must be conducted. The confirmation test must not be conducted less than 15 minutes after, or more than 20 minutes after the screening test.

J. NON SAFETY-SENSITIVE POSITIONS

As is mentioned above, all other regular employees in non-safety-sensitive positions may be tested under any of the following circumstances:

- Pre-Employment Testing
- Reasonable Suspicion Testing
- Post-Accident Testing
- Return-to-Duty Testing
- Employee Requested Testing

The terms for each of these types of testing and precisely the same as those outlined above for Safety-Sensitive Employees.

K. RECORD RETENTION

Drug testing records will be maintained in Human Resources or by a 3rd party administrator. Employees have a right to examine their own drug and alcohol testing records, provide information to dispute the results, and have access to any pertinent data. They also have a right to obtain a copy of their own drug and/or alcohol testing results by submitting a written request to the DER.

The City will safeguard the confidentiality of drug and alcohol testing records and protect the privacy of the individuals tested. Individual test results or medical information will be released to third parties (e.g. previous employer, unions) only with the employee's specific written consent, or to those parties authorized by the DOT or FTA to receive such

information without the employee's consent. Specific written consent applies only to a particular piece of information released to a particular person or organization at a particular time. Blanket releases are specifically prohibited by the DOT.

The employee's written consent is not required in administrative or legal proceedings such as:

1. A lawsuit, grievance, or administrative proceeding brought by, or on behalf of the employee, resulting from a positive drug or alcohol test or a refusal to test; or
2. A criminal or civil action resulting from an employee's performance of safety-sensitive duties where the alcohol or drug test information is deemed relevant.

Access to City facilities and drug and alcohol program records also will be provided, without the employee's consent, to DOT or FTA agency representatives; the National Transportation Safety Board as part of an accident investigation; or a Federal, state or local safety agency with regulatory authority over the City or the employee.

Negative test results will be held for one (1) year and the positive test results will be held for five (5) years. Documentation of employees who refuse to take the controlled substance test will also be included in the records. All records pertaining to controlled substance and alcohol testing will be confidential on a need-to-know basis. Positive controlled substance or alcohol tests results and related information will be used only for medical or disciplinary purposes.

L. UNANNOUNCED SEARCHES ON CITY PROPERTY

The City reserves the right to conduct unannounced searches for drugs and/or alcohol anywhere on City property.

Unannounced searches must be:

1. Approved in advance by the DER or designee; and
2. Conducted in the presence of the highest ranking manager at the employee's work location.

Employees who do not cooperate with unannounced searches may be subject to disciplinary action, up to and including termination.

M. OTHER

The City Human Resource Department shall be responsible for the administration and conformance with this policy. No other City department shall promulgate policies or rules that are inconsistent with or that interpret or administer this policy other than as permitted by the City Human Resources Department. The City reserves the right to re-

vise this policy at any time, with the approval of the City Council.

N. CONTACT PERSON

Any questions regarding this policy should contact the following City representative:

Name: Ben Harvey, or designee
Title: City Manager
Address: Post Office Box 707, Avalon, CA 90704
Telephone: (310) 510-0220

O. DEFINITIONS

ACCIDENT - An unintended happening or mishap where there is loss of human life (regardless of fault), bodily injury, significant property damage, or an injury as defined by Workers' Compensation Guidelines.

ACCIDENT OR CASUALTY (USCG) –Any casualty or accident involving any vessel other than public vessels (vessels owned and operated by U.S. Government), if such casualty or accident occurs upon the navigable waters of the United States, or any casualty or accident involving any U.S. vessel which is not a public vessel.

ADULTERATED SPECIMEN - A urine specimen that contains a substance that is not expected to be present in human urine, or contains a substance expected to be present but is at a concentration so high that it is not consistent with human urine.

ALCOHOL - The intoxicating agent in beverage alcohol, ethyl alcohol or other low molecular weight alcohol including methyl or isopropyl alcohol.

ALCOHOL CONCENTRATION - The alcohol in a volume of breath expressed in terms of grams of alcohol per 210 liters of breath as indicated by an evidential breath test under this regulation. For example, 0.02 means 0.02 grams of alcohol in 210 liters of expired deep lung air.

ALCOHOL USE - Consumption of any beverage, mixture, or preparation, including any medication containing ethyl alcohol. Since ingestion of a given amount of alcohol produces the same alcohol concentration in an individual whether the alcohol comes from a mixed drink or cough syrup, the Department of Transportation prohibits the use of any substance containing alcohol, such as prescription or over-the-counter medication or liquor-filled chocolates. Prescription medications containing alcohol may have a greater impairing affect due to the presence of other elements (e.g., antihistamines).

BREATH ALCOHOL TECHNICIAN (BAT) - A person trained to proficiency in the operation of the Evidential Breath Testing (EBT) device that the technician is using in the alcohol testing procedures. BATs are the only qualified personnel to administer the EBT tests.

CANCELLED TEST –A drug or alcohol test that has a problem identified that cannot be or has not been corrected, or which 49 CFR Part 40 otherwise requires to be cancelled.

A cancelled test is neither a positive nor a negative test. The test is declared cancelled by a Medical Review Officer.

CHAIN OF CUSTODY - The procedures to account for the integrity of each urine specimen by tracking its handling and storage from point of collection to final disposition.

CHEMICAL TEST - A scientifically recognized test which analyzes an individual's breath, blood, urine, saliva, bodily fluids, or tissues for evidence of Dangerous Drug or alcohol use.

CITY - Means CITY OF AVALON.

CITY TIME - Any period of time in which the employee is actually performing, ready to perform, or immediately available to perform any functions.

COLLECTION SITE - A place designated by the City where individuals present themselves for the purpose of providing a specimen of either urine and/or breath.

COMMERCIAL MOTOR VEHICLE - A motor vehicle, or combination of motor vehicles used in commerce to transport passengers or property if the motor vehicle: (1) has a gross combination weight rating of 26,001 or more pounds inclusive of a towed unit with a gross vehicle weight rating of more than 10,000 pounds; or (2) has a gross vehicle weight rating of 26,001 or more pounds; or (3) is designed to transport 16 or more passengers, including the driver; or (4) is of any size and is used in the transportation of materials found to be hazardous for the purposes of the Hazardous Materials Transportation Act (40 CFR Part 172, Subpart F) and which require the motor vehicle to be placarded under the Hazardous Materials Regulations.

CONFIRMATION TEST - For alcohol testing means a second test, following a screening test with a result of 0.02 or greater, that provides quantitative data of alcohol concentration. For controlled substances testing this means a second analytical procedure to identify the presence of a specific drug or metabolite which is independent of the screen test and which uses a different technique and chemical principle from that of the screen test in order to ensure reliability and accuracy. (Gas chromatography/mass spectrometry (CG/MS) is the only authorized confirmation method of cocaine, marijuana, opiates, amphetamines, and phencyclidine.)

CONTROLLED SUBSTANCES - Any drug classified by the U.S. Drug Enforcement Agency (DEA) into the five schedules or classes on the basis of their potential for abuse, accepted medical use, and accepted safety for use under medical supervision.

CONTROLLED SUBSTANCE (DRUG) TEST –A method of detecting and measuring the presence of alcohol and other drugs classified by the U.S. Drug Enforcement Agency (DEA), whether legal or illegal, in a person's body. A controlled substance test may be either an initial test or confirmation test. An initial controlled substance test is designed to identify specimens having concentrations of a particular class of drug above a specified concentration level. It eliminates negative specimens from further consideration.

Controlled substances will be tested under the Department of Health and Human Services guidelines. **The primary (initial or screening) controlled substance test**

thresholds for a verified positive test result for a safety-sensitive employee are those that are equal to or greater than:

Amphetamines		
Amphetamine/Methamphetamine (1)	500	ng/ml
MDMA (Methylenedioxymethamphetamine)	500	ng/ml
Cocaine Metabolites	150	ng/ml
Marijuana Metabolites	50	ng/ml
Opiate Metabolites		
Codeine/Morphine (2)	2000	ng/ml
6-Acetylmorphine	10	ng/ml
Phencyclidine (PCP)	25	ng/ml

The primary (initial or screening) controlled substance test thresholds for a verified positive test result for a non-safety-sensitive employee or a safety-sensitive employee tested under City authority are those that are equal to or greater than:

Alcohol	.04	grams
Amphetemines	1000	ng/ml
Barbiturates	300	ng/ml
Benzodiazepines	300	ng/ml
Cocaine Metabolites	300	ng/ml
Hydrocodone	300	ng/ml
Hydromorhone	300	ng/ml
Marijuana Metabolites	50	ng/ml
Methadone	300	ng/ml
Methaqualone	300	ng/ml
MDMA (Ecstasy)	1000	ng/ml
Opiates	2000	ng/ml
Oxycodone	300	ng/ml
Oxymorphone	300	ng/ml
Phencyclidine	25	ng/ml
Propoxyphene	300	ng/ml

A confirmation drug testing is a second analytical procedure to detect the presence of a specific drug or its metabolite. The confirmation procedure is conducted independent of the initial test and uses a different technique and chemical principle in order to confirm reliability and accuracy. **The confirmatory controlled substance test thresholds for a verified positive test result for a safety-sensitive employee are those that are equal to or greater than:**

Amphetamines		
Amphetamine	250	ng/ml
Methamphetamine (3)	250	ng/ml
MDMA (Methylenedioxymethamphetamine)	250	ng/ml
MDA (Methlenedioxyamphetamine)	250	ng/ml
MDEA (Methlenedioxyethamphetamine)	250	ng/ml
Cocaine Metabolite (Benzoylecgonine)	100	ng/ml
Marijuana Metabolite		
(THCA: Delta-9-tetrahydrocannabinol-9-carboxylic acid)	15	ng/ml

Opiate Metabolites		
6-Acetylmorphine	10	ng/ml
Codeine	2000	ng/ml
Morphine	2000	ng/ml
Phencyclidine (PCP)	25	ng/ml

The confirmatory controlled substance test thresholds for a verified positive test result for a non-safety-sensitive employee or a safety-sensitive employee tested under City authority are those that are equal to or greater than:

Alcohol	.04	grams
Amphetemines		
Amphetamine	500	ng/ml
Methamphetamine (3)	500	ng/ml
MDMA (Ecstasy)	500	ng/ml
Barbiturates	200	ng/ml
Benzodiazepines	200	ng/ml
Cocaine Metabolites (Benzoylecgonine)	150	ng/ml
Marijuana Metabolite (THCA)	15	ng/ml
Methadone	200	ng/ml
Methaqualone	200	ng/ml
Opiates		
Codeine	2000	ng/ml
Hydrocodone	300	ng/ml
Hydromorhone	300	ng/ml
Morphine	2000	ng/ml
Oxycodone	300	ng/ml
Oxymorphone	300	ng/ml
6-Acetylmorphine (4)	10	ng/ml
Phencyclidine	25	ng/ml
Propoxyphene	200	ng/ml

(1) Methamphetamine is the target analyte
(2) Morphine is the target analyte
(3) Specimen must also contain amphetamine at a concentration greater than or equal to 100 ng/ml

CONSORTIUM/THIRD PARTY ADMINISTRATOR (C/TPA) –A service agent who provides or coordinates the provision of a variety of drug and alcohol testing services to employers. C/TPAs typically perform administrative tasks in conjunction with the City's DER concerning the operation of the employers' drug and alcohol testing programs. This City hires a TPA to administer drug and alcohol testing.

COVERED EMPLOYEE (Drug Free Workplace and FMCSA) - A person including a volunteer, applicant, or transferee, who performs a job function for the City.

COVERED EMPLOYEE (USCG) - means any person who performs crewmember duties.

CREWMEMBER –An individual who is:

a. On board a vessel acting under the authority of a license, certificate of

registry, or merchant mariner's document, whether or not the individual is a member of the vessel's crew; or

b. Engaged or employed on board a vessel owned in the United States that is required by law or regulation to engage, employ, or be operated by an individual holding a license, certificate of registry, or merchant mariner's document, except individuals not required under Part 15 of Title 46 of the Code of Federal Regulations (manning requirements) to be on the vessel and who have no duties that directly affect the safe operation of the vessel.

DANGEROUS DRUG –A narcotic drug, a controlled substance, or a controlled substance analog (as defined in section 102 of the Comprehensive Drug Abuse and Control Act of 1970, 21 USC 802). See CONTROLLED SUBSTANCE (DRUG) Test above.

DESIGNATED EMPLOYER REPRESENTATIVE (DER) – The Personnel Officer is the City's authorized authority to take immediate action to remove employees from safety-sensitive duties and to make required decisions in testing following a positive test, test refusal or other policy violations. The DER also receives test results and other communications for the employer, consistent with Department of Transportation Guidelines.

DEPARTMENT OF TRANSPORTATION GUIDELINES - The controlled substance and alcohol testing rules (49 CFR Part 382, FMCSA - Commercial Motor Vehicle; Part 219, FRA – Railroad; Part 199, RHMSA – Pipeline; Part 655, FTA - Mass Transit; 14 CFR Part 120, FAA – Aviation; and 46 CFR Part 4, 5 and 16, USCG) setting forth the procedures for controlled substance and alcohol testing (49 CFR Part 40) in all the transportation industries.

DILUTE SPECIMEN - A specimen with creatinine and specific gravity values that are lower than expected for human urine.

DISABLING DAMAGE - Damage which precludes departure of any vehicle from the scene of the occurrence in its usual manner in daylight after simple repairs. Disabling damage includes damage to vehicles that could have been operated but would have been further damaged if so operated, but does not include damage which can be remedied temporarily at the scene of the occurrence without special tools or parts, tire disablement without other damage even if no spare tire is available, or damage to headlights, taillights, turn signals, horn, mirrors or windshield wipers that makes them inoperative.

DOT - U. S. Department of Transportation.

DRIVER - Any person who operates a commercial motor vehicle. This includes full time, regularly employed drivers; casual, intermittent or occasional drivers; leased drivers and independent, owner-operator contractors who are either directly employed by or under lease to an employer or who operate a commercial motor vehicle at the direction of or with the consent of an employer. For the purposes of pre-employment/pre-duty testing only, the term driver includes a person applying to an employer to drive a commercial motor vehicle.

DRUG (CONTROLLED SUBSTANCE) METABOLITE - The specific substance produced when the human body metabolizes (changes) a given drug (controlled substance) as it passes through the body and is excreted in urine.

EMPLOYEE TRAINING (ALCOHOL) - No training required. However, the City must provide covered employees with educational materials that explain the alcohol misuse requirements and the City's policies and procedures with respect to meeting those requirements. The information must be distributed to each covered employees and must include such information as the effects of alcohol misuse on an individual s health work, personal life, signs and symptoms of an alcohol problem; and the consequences for covered employees found to have violated the regulatory prohibitions.

EMPLOYEE TRAINING (DRUGS) - The City must train all employees who perform safety-sensitive duties on the effects and consequences of prohibited drug use on personal health, safety, and work environment, and on the manifestations and behavioral cues that may indicate drug use and abuse. The City must also implement an education program for safety-sensitive employees by displaying and distributing informational materials, a community service hotline telephone number for employee assistance and the City policy regarding drug use in the work place which must include information regarding the consequences under the rule of using drugs while performing safety-sensitive functions, receiving a verified positive drug test result, or refusing to submit to a drug test required under the rule.

EQUIPMENT - Any and all machinery, material, gear and the like in and/or around the City plants, on City premises, or on customer property and/or premises.

EVIDENTIAL BREATH TESTING DEVICE (EBT) - The device to be used for breath alcohol testing.

INTOXICANT –Any form of alcohol, drug, or combination thereof.

INTOXICATED - An individual is intoxicated when the individual is operating a vessel other than a recreational vessel and has an alcohol concentration of .04 percent by weight or more in his or her blood, or the effect of the intoxicant(s) consumed by the individual on the person's manner, disposition, speech, muscular movement, general appearance or behavior is apparent by observation.

MARINE EMPLOYER –The owner, managing operator, charterer, agent, master, or person in charge of a vessel, other than a recreational vessel.

MEDICAL REVIEW OFFICER (MRO) - A licensed physician responsible for analyzing laboratory results generated by an employer's controlled substance (drug) testing program. The MRO is knowledgeable about substance abuse disorders and has appropriate medical training to interpret and evaluate positive test result considering the individual's medical history and any other relevant biometric information.

NEGATIVE DILUTE TEST RESULTS - Drug test results that are negative for the five drug/drug metabolites but has a specific gravity value lower than expected for human urine.

NEGATIVE TEST RESULTS - For: (1) drug a verified presence of the identified drug or its metabolite below the minimum levels specified in 49 CFR Part 40, as amended; and (2) an alcohol concentration of less than 0.02 BAC.

NON-NEGATIVE TEST RESULTS - A test result found to be adulterated, substitute, invalid, or positive for drug/drug metabolites.

PERFORMING (SAFETY-SENSITIVE FUNCTION) - A safety-sensitive employee is considered to be performing a safety sensitive function and includes any period in which the safety-sensitive employee is actually performing, ready to perform, or immediately available to perform such functions.

POSITIVE TEST RESULTS - For: (1) for a drug test, a verified presence of the identified (screened and confirmed) drug or its metabolite at or above the minimum levels specified in 49 CFR Part 40, as amended, as verified by the MRO; and (2) for an alcohol test, a confirmed alcohol concentration of 0.04 BAC or greater, as verified by the MRO.

POST-ACCIDENT ALCOHOL AND/OR CONTROLLED SUBSTANCE TESTING - Conducted after accidents on employees whose performance could have contributed to the accident. For drivers this is determined by a citation for a moving traffic violation and for all fatal accidents even if the driver is not cited for a moving traffic violation. See Accident.

PRE-EMPLOYMENT CONTROLLED SUBSTANCE TESTING - Conducted before applicants are hired or after an offer to hire, but before actually performing functions for the first time. This also required when employees transfer to a safety sensitive-position.

PROHIBITED SUBSTANCES - Is synonymous to drug abuse and/or alcohol misuse or abuse.

RANDOM ALCOHOL AND/OR CONTROLLED SUBSTANCE TESTING - Conducted on a random unannounced basis just before, during or just after performance of safety sensitive functions.

REASONABLE SUSPICION ALCOHOL AND/OR CONTROLLED SUBSTANCE TESTING - Conducted when a trained supervisor observes behavior or appearance that is characteristic of alcohol misuse or controlled substance abuse.

REFUSE TO SUBMIT (TO AN ALCOHOL AND/OR CONTROLLED SUBSTANCE TEST) - When an employee fails to provide an adequate breath or urine sample for testing without a valid medical explanation after that employee received notice of the requirement to be tested, or engages in conduct that clearly obstructs the testing process (i.e., verbal declarations, obstructive behavior or physical absence resulting in the inability to conduct the test.)

REHABILITATION - The total process of restoring an employee to satisfactory work performance through constructive confrontation, referral to the SAP and participation in SAP recommendations such as education, treatment and/or support groups to resolve personal, physical or emotional/mental problems which contributed to job problems.

RETURN-TO-DUTY AND FOLLOW-UP ALCOHOL AND/OR CONTROLLED SUB-

STANCE TESTING - Conducted when an individual who has violated the prohibited alcohol or controlled substance conduct standards returns to performing safety sensitive-duties. Follow-up tests are unannounced and at least 6 tests must be conducted in the first 12 months after an employee returns to duty. Follow-up testing may be extended for up to 60 months following return to duty upon the SAP recommendation.

RETURN-TO-DUTY AGREEMENT - A document agreed to and signed by the employer, employee and the Substance Abuse Professional that outlines the terms and conditions under which the employee may return to duty after having had a verified positive controlled substance test result or an alcohol concentration of 0.02 and 0.039 on an alcohol test.

SAFETY-SENSITIVE EMPLOYEE (FUNCTION AND/OR POSITION) - An employee is considered to be performing a safety-sensitive function during any period in which that employee is actually performing, ready to perform, or immediately available to perform any safety-sensitive functions. Safety sensitive functions are those that are potentially dangerous, where the discharge of those duties contains inherent risks of injury to yourself or others. For a list of safety sensitive positions, please see contact the Human Resources Department.

SCREENING (INITIAL) TEST - In alcohol testing, it means an analytical procedure to determine whether an employee may have a prohibited concentration of alcohol in their system. In controlled substance testing, it means an immunoassay screen to eliminate negative urine specimens from further consideration.

SUBSTANCE ABUSE PROFESSIONAL (SAP) - A licensed physician (Medical Doctor or Doctor of Osteopathy), or a licensed or certified psychologist, social worker (with knowledge of and clinical experience in the diagnosis and treatment of drug and alcohol-related disorders, the license alone does not authorize this), Certified Employee Assistance Professional (CEAP), or addiction counselor certified by the National Association of Alcoholism and Drug Abuse Counselors Certification Commission (NAADAC) with knowledge of and clinical experience in the diagnosis and treatment of alcohol and controlled substances-related disorders, who makes recommendations concerning education, treatment, follow-up testing, and aftercare.

SUBSTITUTED SPECIMEN - A specimen with creatinine and specific gravity values that are so diminished that they are not consistent with normal human urine.

SUPERVISOR - A person in authority who has had one hour of training on the signs and symptoms of alcohol abuse and an additional hour of training on the signs and symptoms of controlled substance abuse.

VEHICLE - A bus, electric bus, van, automobile, rail car, trolley car, trolley bus, or vessel used for mass transportation.

VALIDITY TESTING - The evaluation of a drug specimen to determine if it is consistent with normal human urine. The purpose of validity testing is to determine whether certain adulterants or foreign substances were added to the urine, if the urine was diluted, or if the specimen was substituted.

VERIFIED NEGATIVE DRUG TEST - A drug test result reviewed by a Medical Review Officer and determined to have no evidence of prohibited drug use above the minimum cutoff levels established by Department of Transportation Guidelines.

VERIFIED POSITIVE DRUG TEST - A drug test result reviewed by a Medical Review Officer and determined to have evidence of prohibited drug use above the minimum cut-off levels established by Department of Transportation Guidelines.

VOLUNTEER – A non-employee who performs a service as a charitable act. A volunteer is deemed a covered employee and subject to FTA drug and alcohol testing if he or she performs a safety-sensitive function and receives remuneration in excess of actual personal expenses incurred while performing the volunteer service, or they are required to hold a commercial drivers' license to operate a vehicle.

APPENDIX A

CITY OF AVALON
EMPLOYEE POSITIONS SUBJECT TO RANDOM DRUG TESTING

CITY OF AVALON, as of this date has established a compelling need for a drug-free workplace. Pursuant to relevant federal laws, those positions that are deemed public safety positions will be subject to random drug and alcohol testing. All safety-sensitive positions that will be subject to random drug tests are detailed below. The classifications of positions subject to random drug testing are listed below.

FMCSA & MARINE

- Class "A or B" commercial driver's license holder
- Safety-Sensitive Personnel
- Controlling dispatch or movement of a commercial vehicle or equipment used in a commercial vehicle
- Maintaining (including repairs, overhaul and rebuilding) a commercial vehicle or equipment used in a commercial vehicle

An Administrator will maintain a list of the specific positions within the above listed classifications that are covered under Department of Transportation regulations. All employees who will be subjected to random drug tests will be informed of this policy and are required to sign the Substance Abuse Policy acknowledging their receipt of the policy. Employees will be eligible for random testing once the policy has been adopted and all of the stated requirements for the administration of the policy meet the requirements for compliance.

ACKNOWLEDGMENT OF CITY OF AVALON DRUG AND ALCOHOL TESTING POLICY

I, the undersigned employee hereby certify that I have been furnished with a copy of the City of Avalon's Drug and Alcohol Testing Policy and that I have read and understand same. I am fully aware, and agree that I may be discharged or otherwise disciplined for any violation by me of said Policy.

Name: _____

Department: _____ Job Title: _____

Signature: _____ Date: _____

ACKNOWLEDGMENT OF CITY OF AVALON
RANDOM DRUG TESTING OF SAFETY-SENSITIVE EMPLOYEES

I, the undersigned employee hereby certify that I have been furnished with a copy of the City of Avalon's Drug and Alcohol Testing Policy and that I have read and understand same. I am fully aware, and agree that I qualify as a safety-sensitive employee, and am thereby subject to random drug testing. I am fully aware, and agree that I may be discharged or otherwise disciplined for any violation by me of said Policy.

Name: _____

Department: _____ Job Title: _____

Signature: _____ Date: _____

CITY OF AVALON CITY COUNCIL

MEETING DATE: September 1, 2015 **AGENDA ITEM:** 9

ORIGINATING DEP: Public Works **CITY MANAGER:** BH

PREPARED BY: Dennis Jaich – Interim Director of Public Works

SUBJECT: Approval of the Contract Documents & Authorization to Commence a Public Bid for the "Avalon Harbor Fueling Facility – Pier Replacement"

RECOMMENDED ACTION(S):
That the City Council approve the Contract Documents and design, and also allow the process of a public bid to follow, for the "Avalon Harbor Fueling Facility – Pier Replacement" (Project).

REPORT SUMMARY:
For many years, the City has been planning, designing, and re-designing our Fuel Dock & Casino Café structure for a complete removal and replacement. As is commonly known, this structure is in critical need of repair as a majority of the existing piers are deteriorated and not connected to either the sea wall or to the bottom of the ocean floor. In this current condition the structure is deemed not safe, and therefore, must be remediated if it is to remain open to the public.

The final design of this structure has been evaluated by many public agencies, and finally, approval was received from the California Coastal Commission in late August. City staff was able to provide the requisite information on the reasoning to change the design features from concrete to timber piers, which finally allowed concurrence that construction can begin immediately once the plans and public bid process is approved by the City.

The timing of this project is critical at this juncture. Due to the expiring matching grants that the City has received from the Department of Boating and Waterways (now Parks & Rec), construction has to begin as soon as possible because the grant will be expiring on March 16, 2016. Our construction schedule at this time will be a fast-tracked process and efforts will be made to expedite all facets of the construction activities involved.

If the Council approves these Contract Documents and the design for the Project, staff would also like to acquire the approval to advertise for a Public Bid.

The Contract Documents (which include design and construction plans) are available for review in the office of the Director of Public Works.

GOAL ALIGNMENT:
City Infrastructure

FISCAL IMPACTS:
In Fiscal Year 15-16 there is $1,000,000 allocated for this project out of the Harbor Fund. The matching grant is 50% from the Department of Parks & Recreation which also incudes $160,000 grant for the new restrooms.

CONSEQUENCES OF NOT FOLLOWING RECOMMENDED ACTION:
The complete Fuel Dock Structure and facility will need to be closed in the future.

FOLLOW UP ACTION:
Approve the construction plans, and allow the City Manager to direct staff to advertise and complete the public bidding process.

ADVERTISING, NOTICE AND PUBLIC CONTACT: Pursuant to the Brown Act.

ATTACHMENTS:
NA

CITY OF AVALON CITY COUNCIL

MEETING DATE: September 1, 2015 **AGENDA ITEM:** 10

ORIGINATING DEP: Administration **CITY MANAGER:** BH

PREPARED BY: Ben Harvey, City Manager

SUBJECT: Request for Letters to the California Public Utilities Commission and State Lands Commission Clarifying Votes of the Avalon City Council Related to Freight Services

---

RECOMMENDED ACTION(S): Review and discuss whether to send letters to the California Public Utilities Commission and the State Lands Commission clarifying recent votes of the Avalon City Council related to freight services.

REPORT SUMMARY: At the request of Mayor Marshall, draft letters to the California Public Utilities Commission and the State Lands Commission providing clarification of recent votes of the Avalon City Council related to freight services have been prepared for City Council review and consideration.

GOAL ALIGNMENT: Not aligned.

FISCAL IMPACTS: No fiscal impact.

CONSEQUENCES OF NOT FOLLOWING RECOMMENDED ACTION: None.

FOLLOW UP ACTION: Direct the City Manager to finalize and prepare the attached letters for the Mayor's signature.

ADVERTISING, NOTICE AND PUBLIC CONTACT: This item was properly listed on the posted agenda pursuant to the Brown Act.

ATTACHMENTS: Draft letters to the California Public Utility Commission and the State Lands Commission.

September 2, 2015

California State Lands Commission
100 Howe Avenue, Suite 100 South
Sacramento, CA 95825-8202

Sent solely via email to kim.lunetta@slc.ca.gov for State Lands Commissioner distribution

RE: LETTER CLARIFYING AVALON CITY COUNCIL VOTE ON RECENT LETTERS TO THE STATE LANDS COMMISSION RELATED TO FREIGHT SERVICE

Dear State Lands Commissioner:

On behalf of the Avalon City Council, I am sending you this letter to clarify the vote of the Avalon City Council behind letters submitted to the State Lands Commission regarding freight service and Lease No. PRC 7378.1.

On June 2, 2015 the Avalon City Council voted 2 to 1 (2 Ayes – Sampson and Marshall, 1 No – Olsen, 2 Abstain – Cassidy and Hernandez) in favor of authorizing the letter dated June 10, 2015 (letter attached).

Sincerely,

Anni H. Marshall
Mayor
City of Avalon

cc: Darwin Farr, CPUC Administrative Law Judge
Members of the Avalon City Council
Avalon Freight Services, LLC

Attachments
Letter from the Avalon City Council to the State Lands Commission dated June 10, 2015

DRAFT

September 2, 2015

President Michael Picker
Commissioner Catherine J.K. Sandoval
Commissioner Michel Peter Florio
Commissioner Carla J. Peterman
Commissioner Liane M. Randolph
California Public Utilities Commission
505 Van Ness Avenue
San Francisco, CA 94102

RE: LETTER CLARIFYING AVALON CITY COUNCIL VOTE ON RECENT LETTERS TO THE CALIFORNIA PUBLIC UTILITY COMMISSION RELATED TO FREIGHT SERVICE

Dear Commissioner <<name – 1 letter for each Commissioner (President included)>:

On behalf of the Avalon City Council, I am sending you this letter to clarify the vote of the Avalon City Council behind a letter supporting Avalon Freight Services, LLC's application pending before the California Public Utilities Commission (CPUC).

On October 21, 2014, the Avalon City Council voted 3 to 2 in favor (3 Ayes – Olsen, Cassidy and Hernandez, 2 Noes – Marshall and Sampson) of authorizing the letter dated October 24, 2014 (letter attached).

On May 5, 2015, the Avalon City Council voted 3 to 2 in favor (3 Ayes – Olsen, Cassidy and Hernandez, 2 Noes – Marshall and Sampson) of authorizing the letter dated May 8, 2015 (letter attached).

Sincerely,

Anni H. Marshall
Mayor
City of Avalon

cc: Darwin Farr, CPUC Administrative Law Judge
Members of the Avalon City Council
Avalon Freight Services, LLC

Attachments
Letter from the Avalon City Council to the CPUC dated October 24, 2014
Letter from the Avalon City Council to the CPUC dated May 8, 2015

DRAFT

City of Avalon
Santa Catalina Island

October 24, 2014

President Michael R. Peevey
California Public Utilities Commission
505 Van Ness Avenue
San Francisco, CA 94102

RE: LETTER OF SUPPORT FROM THE CITY OF AVALON FOR PROPOSED OPERATING PERMIT FOR AVALON FREIGHT SERVICES, LLC

Dear President Peevey:

On behalf of the Avalon City Council, I am sending you this letter to offer the City of Avalon's support for the proposed operating permit for Avalon Freight Services, LLC for freight services from the Port of Los Angeles to the City of Avalon and selected points on Catalina Island.

Avalon Freight Services was selected by the Santa Catalina Island Company following their process that vetted several qualified candidates. Avalon Freight Services, LLC is a joint venture between Catalina Express and Harley Marine Services. The newly formed joint venture has proposed to provide freight services between Santa Catalina Island Company owned property located on Pebbly Beach Road, within the City of Avalon as well as select points on Catalina Island, and a proposed warehouse facility within the Port of Los Angeles, commencing in April of 2016.

The Avalon City Council has reviewed Avalon Freight Services, LLC's proposal, in addition to their draft California Public Utilities Commission (CPUC) application. Further, the Avalon City Council has individually toured the proposed freight warehouse location within the Port of Los Angeles. We believe that Avalon Freight Services, LLC will provide quality freight service to the residents of Avalon and thank you for your consideration of Avalon Freight Services, LLC's proposed operating permit.

Sincerely,

Oley Olson
Mayor Pro Tem
City of Avalon

cc: Members of the Avalon City Council
Avalon Freight Services, LLC

Administration/ Public Works	Finance	Harbor Department	Fire Department	Recreation Department	Planning/Building Capital Improvements
P.O. Box 707	P.O. Box 707	P.O. Box 1085	P.O. Box 707	P.O. Box 707	P.O. Box 707
Avalon, CA 90704	Avalon, CA 90704	Avalon, CA 90704	Avalon, CA 90704	Avalon, CA 90704	Avalon, CA 90704
310 510-0220	310 510-0220	310 510-0535	310 510-0203	310 510-0220	310 510-0220
	Fax 310 510-0765	Fax 310 510-2640	Fax 310 510-0104	Fax 310 510-0528	Fax 310 510-2608

City of Avalon

Santa Catalina Island

May 8, 2015

President Michael Picker
California Public Utilities Commission
505 Van Ness Avenue
San Francisco, CA 94102

RE: LETTER REITERATING SUPPORT FROM THE CITY OF AVALON FOR AVALON FREIGHT SERVICE'S APPLICATION PENDING BEFORE THE CALIFORNIA PUBLIC UTILITIES COMMISSION

Dear President Picker:

At its May 5, 2015 meeting, the Avalon City Council once again voted to support Avalon Freight Service's (AFS) application for freight services from the Port of Los Angeles to the City of Avalon and selected points on Catalina Island that is currently pending before the California Public Utilities Commission (CPUC). This most recent action reiterated a prior Avalon City Council vote that resulted in the initial letter of support for AFS (copy attached), which was sent to the CPUC on October 24, 2014.

With this vote, the Avalon City Council understands that AFS is proposing to serve as the sole provider for freight delivery to the City of Avalon through the Pebbly Beach freight facility. The current freight provider's lease at Pebbly Beach expires on March 31, 2016. Accordingly, the Avalon City Council encourages the CPUC to act swiftly to review and approve AFS' application.

Sincerely,

Anni H. Marshall
Mayor
City of Avalon

cc: Administrative Law Judge Darwin Farrar
Members of the Avalon City Council
Avalon Freight Services, LLC

Attachment
October 24, 2014 Letter from the Avalon City Council to the CPUC Supporting AFS Application

Administration/ Public Works	Finance	Harbor Department	Fire Department	Recreation Department	Planning/Building Capital Improvements
P.O. Box 707	P.O. Box 707	P.O. Box 1085	P.O. Box 707	P.O. Box 1980	P.O. Box 707
Avalon, CA 90704	Avalon, CA 90704	Avalon, CA 90704	Avalon, CA 90704	Avalon, CA 90704	Avalon, CA 90704
310 510-0220	310 510-0220	310 510-0535	310 510-0203	310 510-1987	310 510-0220
	Fax 310 510-0765	Fax 310 510-2640	Fax 310 510-0104	Fax 310 510-9528	Fax 310 510-2608

City of Avalon

Santa Catalina Island

June 10, 2015

State Lands Commission
100 Howe Avenue, Suite 100 South
Sacramento, CA
95825-8202

RE: Lease No. PRC 7378.1

Dear State Lands Commissioners:

Freight delivery service is important to the residents of the City of Avalon due to the community's unique geographic location over twenty miles offshore from the mainland of California. Most essential goods required to sustain the community - including food, clothing, fuel and building material - must be shipped over from the mainland to the island.

The City of Avalon is in favor of free competition for freight delivery service to Catalina Island. Should the State Lands Commission decide to allow for multiple subleases at the Pebbly Beach location in Avalon, the City Council would be supportive.

Sincerely,

Anni H. Marshall
Mayor
City of Avalon

cc: Members of the Avalon City Council

Administration/ Public Works
P.O. Box 707
Avalon, CA 90704
310 510-0220
Fax 310 510-0901

Finance
P.O. Box 707
Avalon, CA 90704
310 510-0220
Fax 310 510-0765

Harbor Department
P.O. Box 1085
Avalon, CA 90704
310 510-0535
Fax 310 510-2640

Fire Department
P.O. Box 707
Avalon, CA 90704
310 510-0203
Fax 310 510-0104

Recreation Department
P.O. Box 707
Avalon, CA 90704
310 510-0220
Fax 310 510-9528

Planning/Building Capital Improvements
P.O. Box 707
Avalon, CA 90704
310 510-0220
Fax 310 510-2608